AD661312

AD

LASER TELEMETER FOR AIR GUN APPLICATION

-Task Report-

by
L. M. Vallese
M. W. Wallace

JULY 1967

Picatinny Arsenal
Dover, New Jersey 07801

Contract DA 28-017-AMC-3455(A)
-Task 1-

ITT Federal Laboratories
Nutley, N.J. 07110

DDC
NOV 2 1 1967

Reproduced by the
CLEARINGHOUSE
for Federal Scientific & Technical
Information Springfield Va 22151

LASER TELEMETER FOR AIR GUN APPLICATION

Task Report

L. M. Vallese
M. W. Wallace

JULY 1967

Picatinny Arsenal
Dover, New Jersey 07801

Contract DA 28-017-AMC-3455(A)
Task 1

ITT Federal Laboratories, Nutley, N.J. 07110

Distribution of this document is unlimited.

SUMMARY

The work of design and fabrication of three Laser Telemeter Units having 18 channels of IRIG telemetry and using a PPM GaAs Laser is described. After a general discussion of the principles of telemetry and of the signal-to-noise enhancement properties of FM, PPM, and PCM systems, a detailed discussion of the electrical and of the mechanical design is presented.

FOREWORD

The work of design and development of the Laser Telemeter for air gun was conducted under Task 1, Contract DA 28-017-AMC-3455(A), Picatinny Arsenal, Dover, New Jersey. The Contract Project Officer was Mr. Lawrence Ouellette. The personnel who conducted the work at ITT Federal Laboratories/Nutley, New Jersey consisted of Dr. L. M. Vallese, Mr. Milner W. Wallace, Mr. Richard Lachenauer.

The authors have considered it a privilege to work with Mr. Ouellette, who was the original creator of the concept of Laser Telemeter and who maintained cognizance of the effort throughout the program. Thanks are expressed to Mrs. J. Smith for her enthusiastic assistance in the secretarial work connected with this project.

TABLE OF CONTENTS

		Page
1.	INTRODUCTION	1
2.	THEORETICAL PRINCIPLES	
	2.1 Telemetry Techniques	1
	2.2 Signal-to-Noise Ratio of Various Modulation Techniques	4
	2.3 Data-Transmission Capacity	7
3.	ELECTRICAL DESIGN OF THE LASER TELEMETER	9
4.	MECHANICAL DESIGN OF THE LASER TELEMETER	13
5.	CONCLUSIONS	16

FIGURES and TABLES
APPENDIX - DETAILED MECHANICAL DRAWINGS

LIST OF ILLUSTRATIONS

FIG. 1 Frequency Multiplexing in FM/FM Telemetry

2 Time-Division Multiplexing in FM/FM Telemetry

3 Example of 8-Channel Multiplexer

4 Example of Supercommutation and of Subcommutation

5 Theoretical Error Rate for Binary System

6 Idealized Waveform of Sensor Output Signals

7 Fourier Spectrum of Rectangular Waveform of Fig. 6

8 Block Diagram of Laser Telemeter Circuit

9 LT-18-357 Circuit

10 Output Pulse Across 0.9-Ohm Resistor (Fig. 9)

11 Pulse Waveform at Point B (Fig. 9)

12 Waveform at Point C of Fig. 9

13 Waveform at Point D of Fig. 9

14 Waveform at Point E of Fig. 9

15 General View of Laser Telemeter (See APPENDIX, LT18-357)

16 Unit Terminal Identification List

17 Operating Jumper Plug

18 Battery Charging Plug

19 Side View of Laser Telemeter LT-18-357

20 Top View of Laser Telemeter LT-18-357

1. INTRODUCTION

In the following report, the work of design and fabrication of three 18-channel Laser Telemeter units for air-gun application developed under Contract DA 28-017-AMC-3455(A) - Task 1 - is presented. The design was initiated on November 29, 1966; the telemeter units were fabricated and were delivered to Picatinny Arsenal, New Jersey, on 1 May 1967.

The laser telemeter was first conceived at Picatinny Arsenal by Mr. Lawrence Ouellette, who also built an initial five-channel experimental model. Starting from this basic design, ITT Federal Laboratories developed an 18-channel model, fully operable in an air gun. The telemeter has been designated Type LT-18-357.

In the following, after a brief review of the basic techniques of telemetry and a comparison of the signal-to-noise ratios and data-transmission capacity of various modulation systems, a detailed description of the electrical and of the mechanical design is presented. Finally, a report on the successful performance of the Laser Telemeter in experiments conducted with an air gun at Frankford Arsenal is given.

2. THEORETICAL PRINCIPLES

2.1 Telemetry Techniques

The study of the variation with time of stresses, strains, temperatures, accelerations, etc., occurring during the operation of missiles and projectiles is extremely important for the design and development of the modern highly sophisticated weapons. Telemetry permits the realization of real-time monitoring; however, in the case of projectiles, the extremely high values of acceleration and temperature encountered, as well as the short times of flight, make the design of telemetry packages rather difficult.

In general, various telemetry techniques are available; these utilize frequency modulation of continuous carriers or modulation of pulse carriers (PAM, PPM, PDM, PCM) and combinations of the two methods.

The FM/FM technique utilizes a number of standard subcarrier oscillators (see Table 1) which are frequency-modulated with deviation ratio five by the data signals provided by the sensors. The over-all band of the various channels ranges from 400 c/s (Channel 1) to 70 Kc/s (Channel 18 or Channel E), and the selection and modulation of the various channels is made so as to avoid frequency overlapping. Thus, the channels may be added together (linear operation - designated "mixing") and constitute a frequency-multiplexing system, which can be demultiplexed readily by means of a suitable bank of filters. In the FM/FM technique, the multiplexed signal is utilized to frequency-modulate an RF carrier selected in the ranges 216 - 260 mc/s , or 1435 - 1535 mc/s , or 2200 - 2300 mc/s (Fig. 1).

A modification of the above technique is obtained by introduction of time-division multiplexing. As shown in Fig. 2, a number of the data channels may be connected at the inputs of a commutator, which samples each of them at a rate of F times per sec and provides at its output a sequence of pulses which are utilized to frequency-modulate one of the subcarrier oscillators. It is well known that, in order that sampling may preserve the information carried in each channel, it is necessary that the sampling frequency be at least twice the highest frequency contained in the spectrum of the channel signal. The output of the commutator consists of a sequence of pulses from various channels which are interleaved and which possess a resultant PRF equal to the product of the number of channels sampled by the rate of sampling. Therefore, if N channels are commutated, and if the maximum spectral frequency in any one channel is f , the sampling rate must be $F \geq 2f$ and the over-all prf at the commutator output is $NF \geq 2\,Nf$. The subcarrier oscillator which is to be frequency-modulated with the latter output signal must be selected so that its total frequency deviation is $10\,NF$ or larger.

Tha combination of time multiplexing with frequency multiplexing just described allows the utilization of the large data-fraquency-rasponsa capability of tha subcarrier oscillator (NF) to tmansmit a number of low data-rate channels (F) , and thus results in a greater economy of the design, although, of coursa, tha over-all information capacity is not changad.

In tha above-described technique, the data signals from tha various channels fraquency-modulata continuous subcarrier oscillators. Alternatively, the data signals may be made to modulate pulse carriars; for this purpose, the techniquas of PAM (pulse-amplitude modulation), PDM (pulse-duration modulation), PPM (pulse-position modulation), or PCM (pulse-coda modulation) may be used. If a single data channal is prasent, and if its maximum spectral fraquency is f , the output may be made to modulata diractly a sequenca of pulses, having prf equal 2f or larger. In the case of PCM, aach pulse is modulatad digitally, rasulting in a group of shorter digits (bits) where tha prf of the group of bits is 2f or larger. Finally, tha modulated pulse sequenca may be made to frequency- or phase-modulate tha RF transmitter carriar. Thus, these techniques may be designated raspectively PAM/FM, PDM/FM, PPM/FM, PCM/FM.

In general, more than one data channel is present; in order to utiliza the above-dascribed pulse-modulation techniques, a commutator is used, so that the outputs of the various data channels are time-multiplexed and appear as a resultant sequence of samples or pulses with prf NF (if N is tha number of channels and F is the commutator rate). Clearly, in this case the basic prf of tha carrier pulses to be modulated must be 2Nf or larger. An example of time-multiplaxing of eight data channels in connaction with a PAM technique is shown in Fig. 3; in this case, a master clock triggers a chain of flip-flops which, through a dioda logic matrix, provide enabling pulsas to the gatas of the multiplexer. The multiplaxed samplad data

are further gated through a "duty cycle gate" which allows only the middle 50% of each sample, in order to remove transients and facilitate separation between channels and synchronization at the receiving end. For synchronization purposes, one portion of the transmitted "frame" is reserved for a sync pulse, which ensures the proper resetting of the demultiplexer binary divider chain; in addition, continuous control of the frequency and phase of the demultiplexer master clock is provided, so that the latter remains closely synchronized with the multiplexer master clock, even though frequency and phase shifts due to doppler effects or to other phenomena may occur.

A very important property of the multiplexer is its versatility in permitting an increase of the data-rate capability of a channel by supercommutation (by combining the inputs of two multiplexer gates together, obtaining the sum of the individual bandwidths); for example, in the case of Fig. 4, Channels 1 and 5, 2 and 6, 3 and 7 may be connected in parallel, because they divide the frame into equal time periods and thus result in samples taken at uniform intervals. For example, if the prf is 20 Kc, each channel of the eight channel multiplexers would have a sampling rate of 2500 c/s ; combining 1 and 5 in parallel gives a sampling rate of 5,000 c/s for the resulting data channel.

Another useful property is the ability to apportion a given bandwidth among a number of channels by subcommutation. For example, in the case of Fig. 4, if one of the multiplexer inputs at 2500-c sampling rate is connected to the output of another multiplexer, having (say) 16 channels, each of the input channels of the latter would have a sampling rate of about 156 c/s .

2.2 Signal-to-Noise Ratio of Various Modulation Techniques

Study of the values of the signal-to-noise ratio after detection (S_o/N_o) for various modulation techniques shows that, in certain cases, this ratio may be made larger than the corresponding signal-to-noise ratio before detection (S_c/N_c) . For example, neglecting the

noise contributions within the receiver, it is found that, for FM systems, the following relations exist:

$$\left(\frac{S_o}{N_o}\right)_{FM} = 3\beta^2 \left(\frac{S_c}{N_c}\right)$$

where $\beta = \Delta\omega/\omega_m$ is the modulation index; the latter relation is valid provided S_c/N_c is above a threshold value which, for large B, is generally taken as 20:1 (i.e., 13 db). In amplitude-modulated systems, the signal-to-noise ratio after detection cannot be increased above the value S_c/N_c. This property of FM systems permits the efficient exchange of bandwidth for power; for example, if $\beta = 5$, the FM output S/N is 75 times that of an equivalent AM system. Alternatively, for the same S/N at the output of both FM and AM detectors, the required power of the FM carrier is 1/75 that of the AM carrier.

Consider now the technique of pulse-position modulation. In this case, one finds the following relationship:

$$\frac{S_o}{N_o} = 2\, t_o^2\, \beta^2\, \frac{S_c}{N_c}$$

where t_o is the maximum modulation displacement in any one direction away from the unmodulated position of the pulse, and β is the system bandwidth. Thus, for a given value of the bandwidth, the signal-to-noise ratio may be enhanced provided a suitable maximum modulation displacement is realized. Vice versa, for a given modulation displacement, the enhancement is obtained by increasing the system bandwidth. As an example, if $t_o = 1\mu sec$ and $B = 3.3$ mc/s, one has:

$$\frac{S_o}{N_o} = 22\, \frac{S_c}{N_c}$$

an improvement of 13 db.

In the case of PCM systems, the signal-to-noise ratio varies exponentially with the bandwidth. In fact, assume that the PCM is a binary (i.e., that it transmits two amplitudes only, such as 1, 0 or 1, -1); if there are m bits per group, the total number of quantized levels is $s = 2^m$. In addition, if the sampling rate is $2f$, the number of bits per level is m, the number of pulses transmitted is $2mf$, and the channel bandwidth is $\beta = mf$.

At the receiver end, the pulses are reshaped, removing noise and distortion added in transmission. When the signal-to-noise ratio is above a threshold on the order of 20 db, the probability of error at detection becomes very small (Fig. 5). The information capacity of the PCM system for double-polarity digit pulses is written as follows:

$$C = m f \log_2 \left(1 + \frac{2 S_{ave}}{k^2 N}\right)$$

where S_{ave} is the average signal power and k is the ratio between voltage quantization step and rms noise voltage N. In an ideal communication system of bandwidth $m f$, one has:

$$C = m f \log_2 \left(1 + \frac{S_{ave}}{N}\right) ;$$

thus, it is noted that the capacity of PCM systems is closely related to the maximum ideal value and that it is proportional to the bandwidth; furthermore, power and bandwidth are exchanged on a logarithmic basis. For a given bandwidth, the theoretical value of the capacity is obtained using a power $k^2/12$ times larger than the theoretical value; at threshold, this is about 8 times. Finally, the ratio S_o/N_o at the decoder output varies linearly with m; i.e.,

$$\left(\frac{S_o}{N_o}\right)_{db} = 10.8 + 6\,m$$

Recapitulating, PCM offers a greater improvement of S/N than other modulation systems. In addition, because of the possibility of regenerating the individual bit pulses, the S/N ratio is not affected by fluctuation noise in transmission, provided the S/N is above threshold.

In the ITTFL design of the Laser Telemeter, a PPM technique was utilized, as explained later; the maximum modulation displacement was on the order of $1\mu sec$ or higher. The system bandwidth, which includes the bandwidth of the receiver, has not been determined.

2.3 Data-Transmission Capacity

Theoretically, the information capacity of a channel (i.e., the maximum rate of transmitting information) is proportional to the system bandwidth and depends upon the number of different symbols to be transmitted and upon their probability of occurrence; for example, in an ideal communication system,

$$C = \beta \log_2 \left(1 + \frac{S_{ave}}{N}\right)$$

Consider a telemetry channel of given bandwidth. If the modulation technique is FM (i.e., if the data signals are made to modulate a continuous subcarrier oscillator), the ratio between the maximum frequency deviation of the subcarrier oscillator and the corresponding modulation frequency is the modulation index $\beta = \Delta\omega/\omega_m$. For IRIG standards, this ratio is taken as 5, in order that wideband FM be obtained. In general, the critical value $\beta = \pi/2$ is taken as representing the transition between narrowband FM (spectral energy concentrated at the carrier) and wideband FM (spectral energy spread over a wide frequency range).

Thus, the data capacity of the various FM IRIG channels is given approximately by $\Delta_D/5$. It has values of 110 c/s for Channel 11 ; 450 c/s for Channel 15 ; 1050 c/s for Channel 18 ; 2100 c/s for Channel E ; etc.

The data rates expected in the case of projectiles are in general within these ranges. The motion of the projectile within the gun is analyzed by the science of "interior ballistics". In general, a force, expressed as the product of the pressure times the cross-section of the projectile or gun barrel, is applied abruptly at the start and imparts an acceleration depending upon the mass of the projectile; as an example:

$$x'' = F/m = a$$

Assuming that the motion is only translational, and neglecting friction and resistance of air, one finds that, during a time interval 0 , τ , the projectile receives increments in velocity and position given by:

$$\Delta_v = \frac{F_{ave}\ \tau}{m}$$

$$\Delta_x = \frac{1}{2}\ \frac{F_{ave}\ \tau^2}{m}$$

where F_{ave} is the mean value of the force in the $0,\tau$ time interval . In the case of the air gun, the phenomena are complicated by the effect of air resistance as the projectile nears the end of the path.

Flight times for air-gun lengths on the order of 50 to 100 ft are on the order of 10 - 20 msec , depending upon the mass of the projectile.

In order to evaluate the corresponding data bandwidth, assume that the sensor output waveform possesses a rectangular shape, with duration τ and amplitude V (Fig. 6). The Fourier transform of this signal is (Fig. 7):

$$F(j\omega) = V\tau \frac{\sin(\omega\tau/2)}{(\omega\tau/2)}$$

The corresponding bandwidth may be taken as $\Delta f = 1/\tau$; this value represents an approximation, but is acceptable since the bandwidth is not critically dependent upon the waveform of the sensor output. In fact, if one assumes that the latter waveform has a triangular shape, the Fourier transform is expressed as follows:

$$F(j\omega) = V\tau \left[\frac{\sin(\omega\tau/2)}{\omega\tau/2} \right]^2$$

and the effective bandwidth is still approximately $\Delta f = 1/\tau$.

Thus, it is seen that, using FM telemetry Channel 18, with frequency response 1050 c/s , a data rate corresponding to a flight time as short as 1 millisecond may be transmitted usefully. In practice, it is expected that the applicable data rates are much smaller than the above value.

3. ELECTRICAL DESIGN OF THE LASER TELEMETER

The selection of the optimum modulation technique for the design of a laser telemeter is made on the basis of considerations of modulation properties of the laser. A laser telemeter differs basically from an RF telemeter because its output carrier is emitted as a highly collimated beam, instead of as an isotropic radiation pattern; thus, the use of a laser requires radically different system design. The high directionality of the emitted carrier is useful in the case of projectiles and missiles to provide trajectory and velocity information. In the case of application to the air gun, the trajectory is a straight line contained in a dark cylinder, at the end of which the antenna of the receiver is located. Thus, the laser carrier lends itself very conveniently to this

particular application and provides a highly intense radiation field and a large signal-to-noise ratio because of its beam-collimation properties.

The GaAs laser is best suited for the design of the telemeter because it operates with high efficiency and requires unsophisticated modulators. However, the power-dissipation properties must be taken into account in determining the actual capabilities of the design. The laser diode is generally built on a small support of molybdenum, whose length (2-3 mils) keeps the junction away from the basic thermal sink and thus results in a limitation of the cooling and an increase of the junction temperature under high current drive.

In general, if it is assumed that the junction temperature is maintained constant at an equilibrium value, there exists a threshold of input current (and of input power) in correspondence of which laser action occurs. As an example, at room temperature, the laser diode RCA TA2628 has a typical current threshold of $\sim$ 10A--i.e., an input power threshold of $\sim$ 15 watts (taking into account the input resistance of $\sim$.15 ohm . As the junction temperature T is decreased, the threshold current varies with the power T^3 . Assuming that the laser is driven with pulses of peak power P_p , of duration τ , and of repetition frequency f , the average power input is calculated as follows:

$$P_{ave} = P_p \tau f$$

For a given thermal dissipation design, the values of P_{ave} and of P_p are prescribed; on the other hand, the frequency f must be selected in accordance with the sampling theorem (i.e., about twice the maximum frequency of the spectral distribution of the data signals). There remains the parameter τ which must be made as small as possible, consistent with the response characteristics of the laser diode. In

practice, pulses as narrow as 5 nanoseconds have been used for the laser telemeter design; the frequency f has been selected as 150 Kc/s and thus the ratio P_{ave}/P_p has been made approximately 750×10^{-6}.

A further decrease of the power dissipation of the laser telemeter has been realized by operating the unit intermittently--i.e., with pulse trains of duration T' and repetition frequency f'. In practical realization, the values of T' and of f' have been selected as $\sim$45 msecs and $\sim$0.5 c/sec respectively. The reduced power dissipation has been found helpful in improving the operation of the laser as well as that of the avalanche driver stages, and has permitted the utilization of a smaller-size dc-dc converter; on the other hand, the intermittent mode of operation of the laser does not interfere with its utilization since the flight time in the air gun is expected to be on the order of 10 - 20 milliseconds.

A block diagram of the design of the laser telemeter is shown in Fig. 8. The laser utilizes an FM/PPM-modulation technique; eighteen separate input data channels are available and are used to frequency-modulate a corresponding number of standard IRIG subcarrier oscillators Channels 1 to 18. The outputs of the latter are added together ("mixed") with application of preemphasis and are finally added linearly to a 150-Kc sinusoidal carrier, generated by a local oscillator. The resulting voltage is converted into a pulse sequence with positive-going pulses occurring in correspondence of the zero crossings of the wave; this is obtained by means of amplification, limiting, differentiation, clipping. The sequence carries information by a pulse-position-modulation technique. Finally, the pulses are utilized to trigger avalanche stages, which in turn drive the GaAs laser.

The intermittent pulse-train operation is obtained by recourse to a gating transistor, controlled by a signal generated in a dissymmetric multivibrator (the wave form is a rectangular pulse with duration $\sim$ 45 msec , rep rate $\sim$ 0.5/sec) . The avalanche stages utilize 2N3507 transistors; these have been selected after careful examination of a number of units. As an example, in Table 2 there are summarized the

experimental data obtained comparing the amplitudes of the output pulses, the corresponding time durations, the minimum collector avalanche voltages, the maximum permissible collector voltages for a number of transistors--Type 2N3034, 2N3035, and 2N3507. The avalanche stages are supplied from a dc-dc converter; however, since the current drain of the avalanche transistors is very high during the ON state, two large storage capacitors (50μF) have been added to supply additional power at the peak of the demand.

A detailed circuit diagram of the laser telemeter is shown in Fig. 9; among the details of design of interest we note the use of a clamping diode at the base of first transistor 2N3507, to raise the trigger pulse above ground; the use of diode FD100 to provide a return path for the charging current of the capacitors in the avalanche stages; the use of a voltage divider to provide stable and accurate supply voltages for the drive and final avalanche stages; the use of two parallel-connected output avalanche stages. Waveforms of the signals appearing at various points of the system have been taken and are shown in Figs. 10 to 14. In Fig. 10 is shown the output pulse obtained by replacing the laser diode with a 0.9-ohm resistor; the visual observation was made using Tektronix Scopes Mod 545A and Mod 585, which have respectively 15-nsec and 4.5-nsec rise time; the measurement of the pulse duration is ~15 nsec with Mod 545A and ~ 5nsec with Mod 585; the peak current is ~7.5A .

The shape of the output pulse train is shown also in Fig. 10. In this case, the pulse-train duration was 42 milliseconds; the train rep rate was 0.45/sec ; the pulse rep rate was 150 Kc/s ; the peak current was initially 7.5A and dropped to 5A at the pulse end.

In Fig. 11, the waveform of the pulses driving the final avalanche stages is shown. It is seen that the peak voltage varies from 6V at the beginning of the pulse train to 5V at the end of the train; thus, a smaller droop than that shown at the final stage is present.

In Fig. 12, the waveshape of the pulses driving the first avalanche stage is shown in the case of no modulation; these pulses have a peak of 4V and a duration of about 6.2 μsec . When telemetry signals are applied, a periodic back-and-forth shift ("jitter") of the said pulses about their "no-modulation" position occurs.

In Fig. 13, the waveshape of the signals consisting of the 150 Kc/s carrier with and without superimposed telemetry signals is shown.

In Fig. 14, the envelope of the pulse train (gate pulse) is presented; this has a magnitude of 8 - 10V , a duration of 42 msec , and a rep rate of 1 per 2.2 sec .

4. MECHANICAL DESIGN OF THE LASER TELEMETER

A general view of the Laser Telemetry Unit is shown in Fig. 15. The over-all weight is 7 lbs. Since it is comprised of several more-or-less discrete elements or subassemblies, a brief description of each can be given.

Recessed in the base plate is a Winchester Connector, to which all external connections may be made for both operation of the Telemeter and recharging of the batteries. Internal connections to this unit terminal are listed in Fig. 16. The mating external connector must provide jumper connections as shown in Fig. 17 for operation of the unit or as shown in Fig. 18 for recharging the batteries.

To the inside of this base plate is screwed the special mount containing the 18 subcarrier oscillators plus a mixer-amplifier. This mount also has a similar terminal to that of the entire unit so that it plugs into the prewired socket when the base plate is screwed to the rather intricate aluminum block that carries the DC-DC converter. No attempt has been made to show the many wires that exist in the junction box which can be located on the drawing by its cover, Item 7.0. These

wires, the back of the terminals to which they are connected, and the DC-DC converter all are encapsulated with High Temp Resin or Dow-Corning Silastic.

The next assembly is the Battery Block of aluminum in which are potted the batteries, their interconnections, and a socket through which the mixed signal and DC voltages are connected to the two layers of encapsulated circuits indicated as Item 5.

The circuits contained in the first layer are the carrier oscillator and the multivibrator which gates the unit on periodically. The second layer contains the remainder of the circuit stages. Each of these layers uses cordwood construction between 1/32-in.-thick fiberglass disks. Many connections were made by soldering as sound resistances welds were not obtained on the leads of many of the available components. All of these soldered connections were made mechanically by binding and crimping the leads so that the circuits were complete before soldering. Each layer contains four brass bushings, with those of lower layer threaded to receive No. 6-32 screws. This system makes the two layers into a single unit with the screws and bushings providing more dimensional stability than the potting resin alone can achieve. The six interconnections between layers are clinched and soldered near the outer diameter of the interface and are covered with Silastic.

To provide the very short pulses (about 5-nanosecond duration), the final avalanche transistor stage is located centrally just beneath the transistor socket into which the GaAs laser is plugged. Plugging-in rather than solidly wiring-in the laser was chosen to facilitate replacement of the latter. However, if solid wiring connection is used, it may be possible to decrease further the duration of the laser pulses, thus improving the over-all thermal performance.

The laser used is the type RCA-TA2628. Though this laser can be operated at room temperature, the current required is 10 - 15 Amperes, and the laser still must be cooled to maintain it at room temperature.

During the course of work on this contract, it has been found that these lasers can be operated with 5-nsec pulses at 150,000 pulses per second at any temperature below -30°C when the driving circuit has only one of the two transistors operating. The second avalanche transistor doubles the current to assure above-threshold lasing. It was also found that, cooling with dry ice in the annular channel of Item 4.00, about 30 minutes of operation could be obtained. Since this time interval coincides with the permissible discharge time of the batteries, it is considered adequate.

Cooling of the laser is obtained by clamping it in a brass collar with an annular channel in which a doughnut of dry ice is placed. Since the case of the laser is above ground, the collar is mounted on a 3/16-in. thick disk of fiber glass. Thus, the laser is held in the collar with a brass jam nut, and its 1/2-in.-long leads (one insulated with teflon sleeving) pass through individual holes in the bottom of the collar, then through a common clearance hole in the fiberglass and into the transistor socket in the circuit deck.

The battery block, DC-DC converter block, and the subcarrier oscillator base plate all are mounted together with stainless-steel screws; on the other hand, the circuit deck assembly and laser head are plugged in, and must be held with an outer stainless-steel case, Item 3.00, and the nose piece, Item 1.00. Because of the usual slight out-of-round of stainless-steel tubing and slight misalignment of the several assemblies within the unit, the case is a very snug fit. Three set screws, Item 2.00, are used to hold the nose piece to the case. This arrangement holds the unit together only adequately for handling; but when it is loaded into the vehicle of an air gun and a jam nut run down against the shoulder of the nose piece, everything is made secure.

Collimation of the laser beam is obtained by means of a lens supported in a brass holder and secured with a stainless-steel jam nut in the aluminum nose piece. Finally, photographs of the completed Laser Telemeter Unit are shown in Figs. 19 and 20.

5. CONCLUSIONS

The work of design and fabrication of the Laser Telemeter Unit was completed successfully. The performance of the laser diode exceeded the original hopes, and the circuits of pulse generation, avalanche, modulation, etc., were also brought to a high degree of refinement. A judicious compromise between thermal and electrical design was achieved.

Preliminary tests conducted at Frankford Arsenal in a 70-ft air gun have shown that the Laser Units withstand very well the accelerations and the stresses produced in this type of experimentation. No damage to any components, including the laser diode, was noted. Information data placed on Channel 17, 52.5 Kc/s and consisting of a 100-c/s sinewave, was recovered from the tape recording made during the test.

It is expected that further advances of design will be possible on the basis of the results obtained with the present Telemeter. In particular, the duration of the pulses and their duty cycle may be increased, thus extending the range of applicability of the device. Additional improvements in weight may be obtained by more-extensive recourse to integrated circuits.

TABLE I

SUBCARRIER OSCILLATOR FREQUENCIES

BAND	CENTER FREQ. (cps)	LOWER LIMIT (cps)	UPPER LIMIT (cps)	DEVIATION (%)	FREQUENCY RESPONSE (cps)
1	400	370	430	±7.5	6
2	560	518	602	"	8.4
3	730	675	785	"	11
4	960	888	1,032	"	14
5	1,300	1,202	1,398	"	20
6	1,700	1,572	1,828	"	25
7	2,300	2,127	2,473	"	35
8	3,000	2,775	3,225	"	45
9	3,900	3,607	4,193	"	59
10	5,400	4,995	5,805	"	81
11	7,350	6,799	7,901	"	110
12	10,500	9,712	11,288	"	160
13	14,500	13,412	15,588	"	220
14	22,000	20,350	23,650	"	330
15	30,000	27,750	32,250	"	450
16	40,000	37,000	43,000	"	600
17	52,500	48,560	56,440	"	790
18	70,000	64,750	75,250	"	1,050
A	22,000	18,700	25,300	±15	660
B	30,000	25,500	34,500	"	900
C	40,000	34,000	46,000	"	1,200
D	52,500	44,620	60,380	"	1,600
E	70,000	59,500	80,500	"	2,100

TABLE II

TESTS OF AVALANCHE TRANSISTORS

TRANSISTOR TYPE	TRANSISTOR NO.	SIGNAL INPUT		SIGNAL OUTPUT		MIN. AVALANCHE VOLTAGE	SELF-AVALANCHE VOLTAGE
3507	2	6 V	20NS	20V	14NS	120V Not Aval.	130V
3034	A	1.2V	20NS	>20V	5NS	85V "	90V
3507	31	1.3V	20NS	>20V	5NS	95V "	155V
3507	1	4 V	20NS	18V	10NS	100V "	110V
3034	B	1.3V	20NS	>20V	5NS	87V	92V
3507	5	4 V	20NS	15V	15NS	95V Not Aval.	100V
3507	9	4 V	20NS	17V	13NS	100V "	105V
3507	7	4 V	20NS	18V	12NS	100V "	110V
3507	8	4 V	20NS	20V	12NS	105V "	120V
3507	4	4 V	20NS	17V	15NS	120V "	140V
3507	6	4 V	20NS	19V	12NS	115V "	125V
3507	3	4 V	20NS	19V	14NS	120V "	130V
3034	C	1.4V	20NS	17V	5NS	70V	75V
3034	D	1.3V	20NS	>20V	5NS	80V	90V
3034	E	1.3V	20NS	>20V	5NS	80V	92V
3034	F	1.2V	20NS	>20V	5NS	82V	92V
3034	G	1.2V	20NS	>20V	5NS	85V	90V
3034	H	1.2V	20NS	20V	5NS	76V	94V
3034	I	1.2V	20NS	18V	5NS	70V	85V
3035	1	1.2V	20NS	14V	5NS	65V	67V
3035	2	1.2V	20NS	10V	7NS	70V	72V
3035	3	1.2V	20NS	15V	5NS	60V	78V
3035	4	1.4V	20NS	9V	8NS	60V	60V
3035	5	1.2V	20NS	11V	5NS	55V	57V
3035	6	1.3V	20NS	>20V	5NS	80V Very Unstable	60V
3035	7	1.2V	20NS	14V	5NS	58V	78V
3035	8	1.1V	20NS	13V	5NS	65V	68V
3035	9	Doesn't Avalanche					40V
3035	10	1.2V	20NS	9V	10NS	70V	70V
3507	1	1.3V	20NS	>20V	5NS	95V	143V
3507	2	1.4V	20NS	>20V	5NS	100V	160V
3507	3	1.2V	20NS	16V	5NS	95V Very Unstable	75V
3507	4	1.4V	20NS	>20V	5NS	100V	150V
3507	5	1.4V	20NS	>20V	5NS	105V	130V
3507	6	1.4V	20NS	>20V	5NS	105V	160V
3507	8	1.3V	20NS	>20V	5NS	95V	105V
3507	9	Doesn't Avalanche at all					80V
3507	10	1.4V	20NS	>20V	5NS	105V	155V
3507	11	1.4V	20NS	>20V	5NS	105V	145V
3507	12	1.2V	20NS	>20V	5NS	100V	100V
3507	13	1.3V	20NS	>20V	5NS	115V	170V
3507	14	1.4V	20NS	>20V	5NS	105V	160V
3507	15	1.4V	20NS	>20V	5NS	95V	145V

DISTRIBUTION LIST

Commanding Officer
Picatinny Arsenal
Dover, New Jersey — 6

Attn: Director, Production and Procurement
Directorate, SMUPA-PA12

Defense Documentation Center for
Scientific and Technical Information
Cameron Station
Alexandria, Virginia — 20

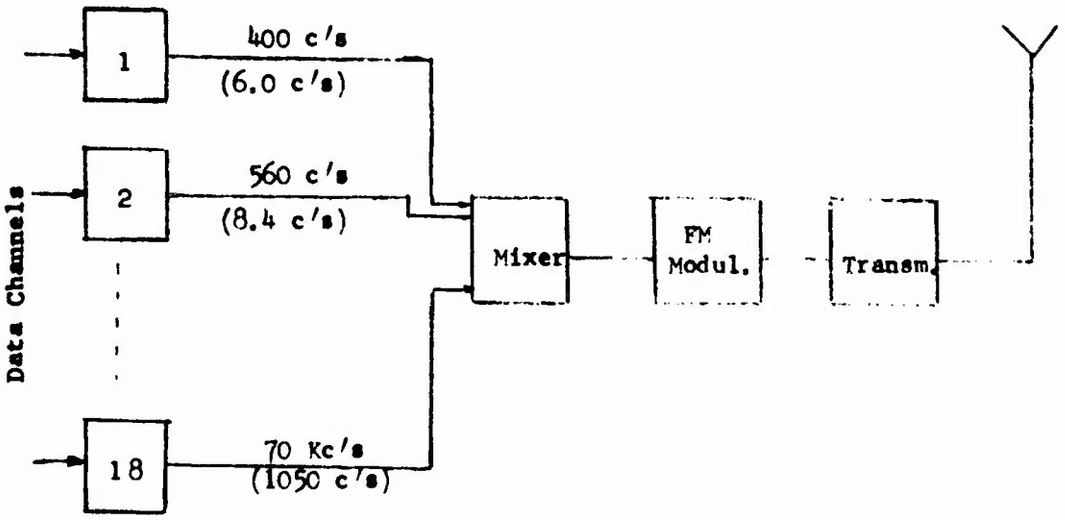

FIG. 1 - FREQUENCY MULTIPLEXING IN FM/FM TELEMETRY

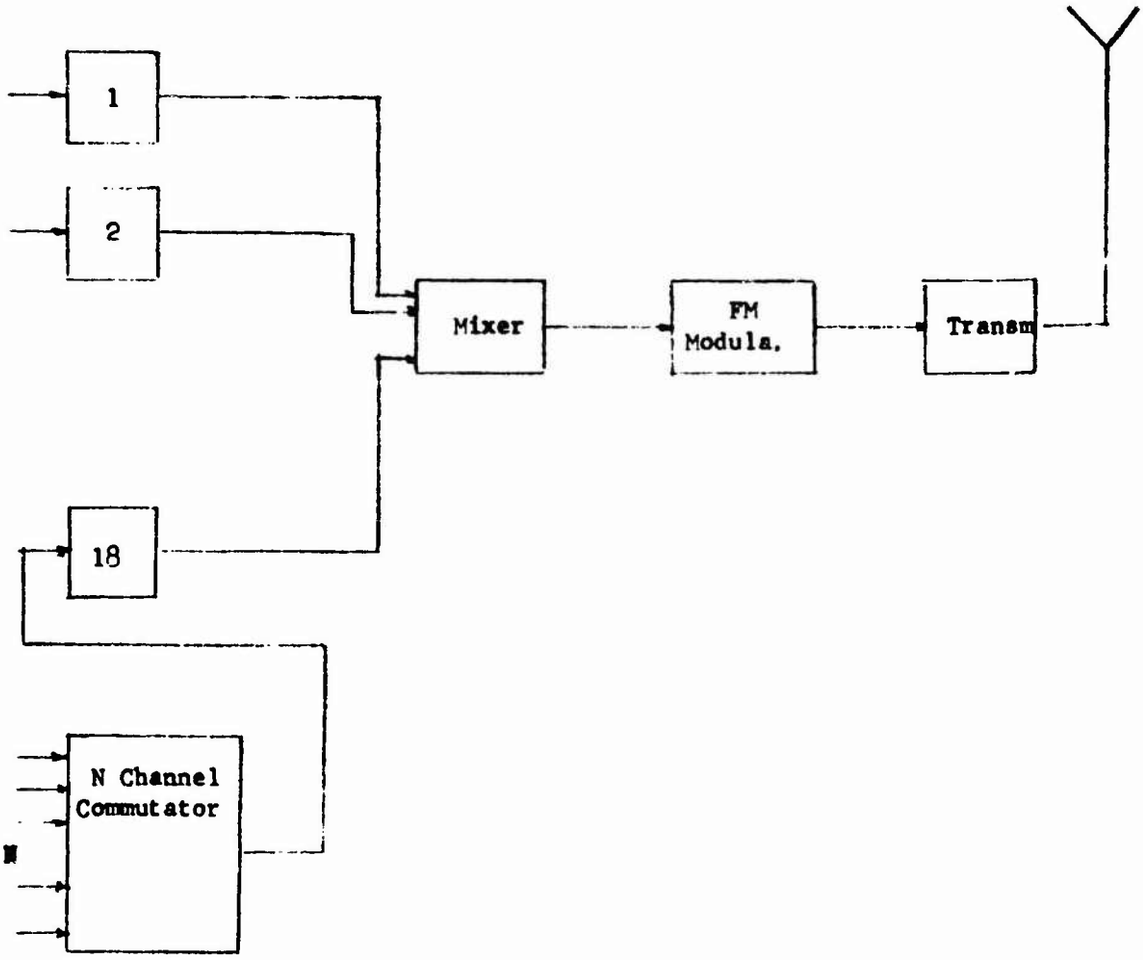

FIG. 2 - TIME-DIVISION MULTIPLEXING IN FM/FM TELEMETRY

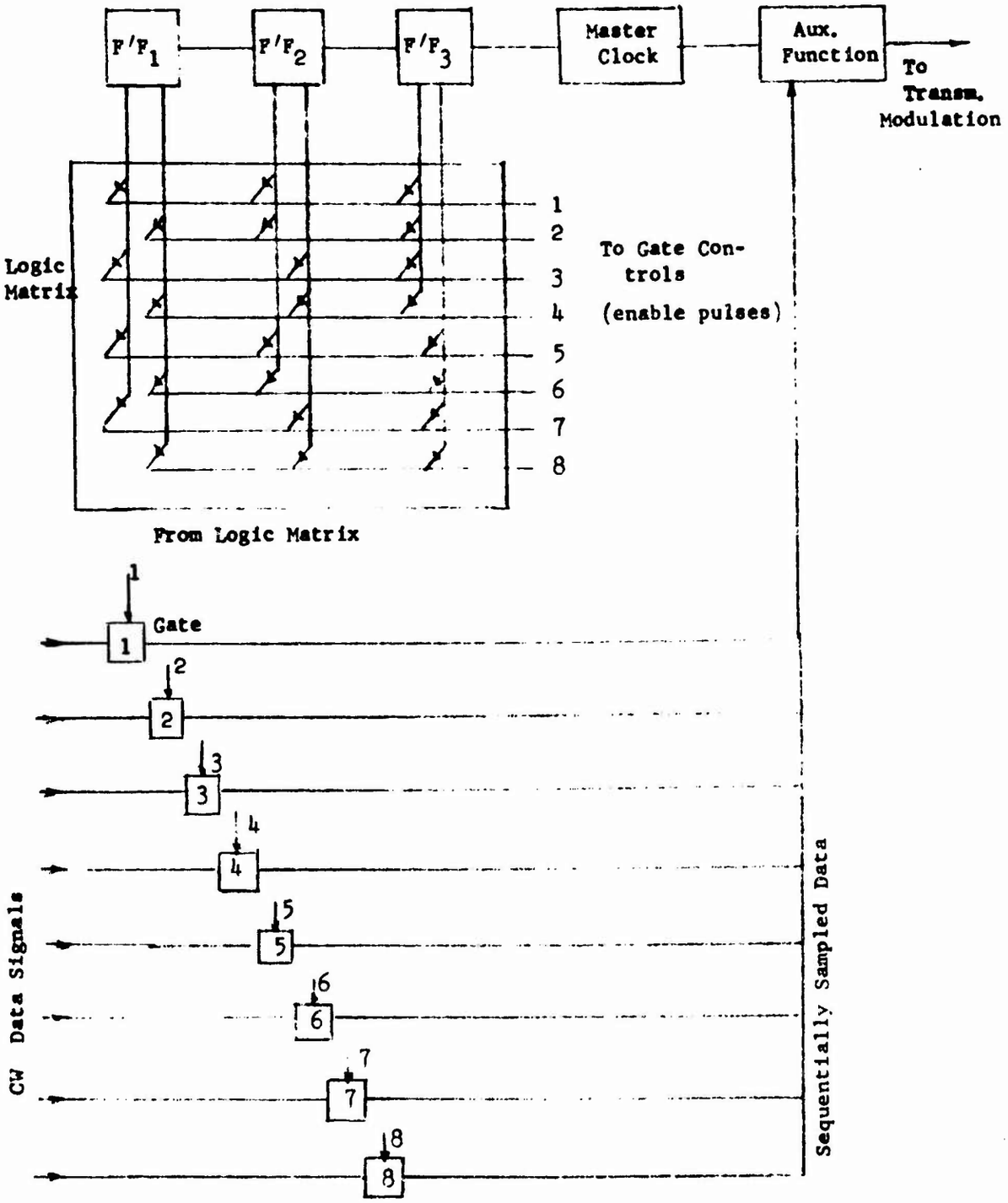

FIG. 3 - EXAMPLE OF 8-CHANNEL MULTIPLEXER

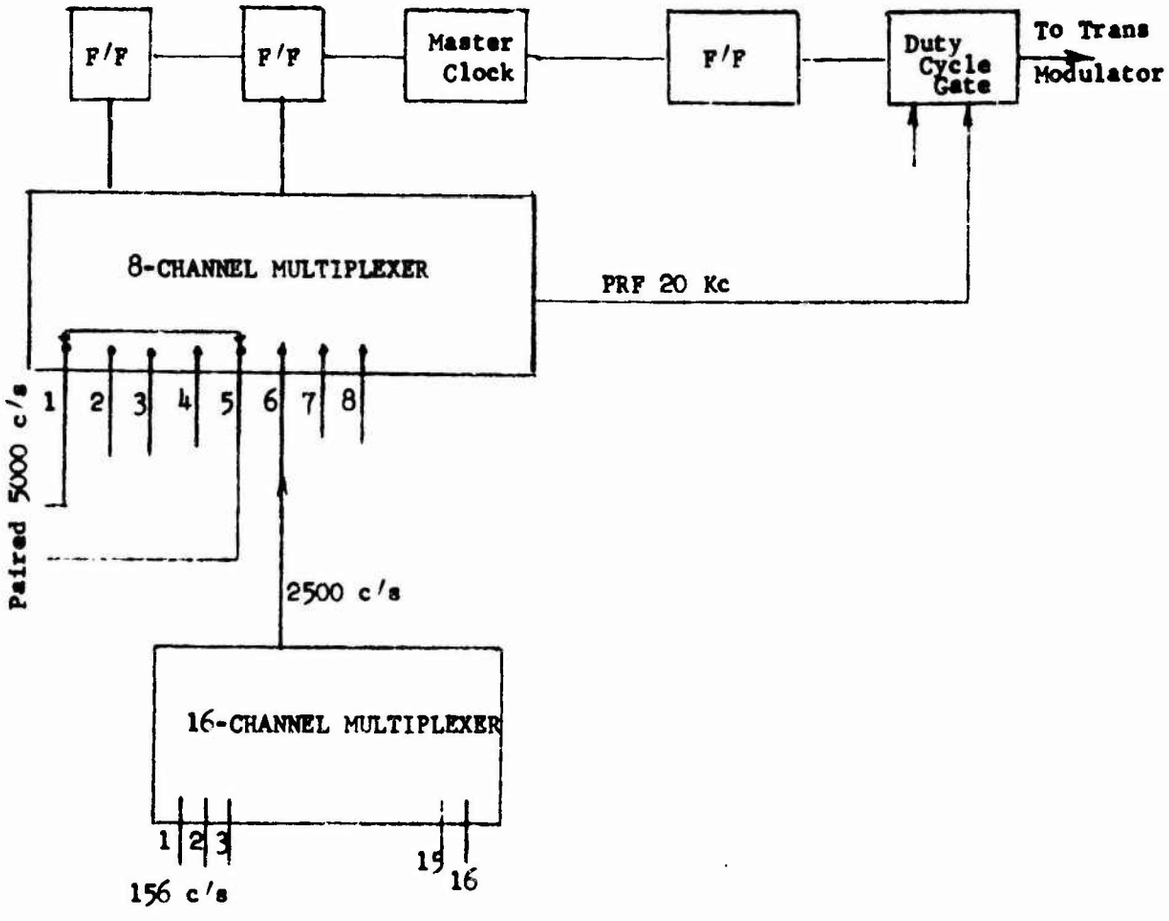

FIG. 4 - EXAMPLE OF SUPERCOMMUTATION AND OF SUBCOMMUTATION

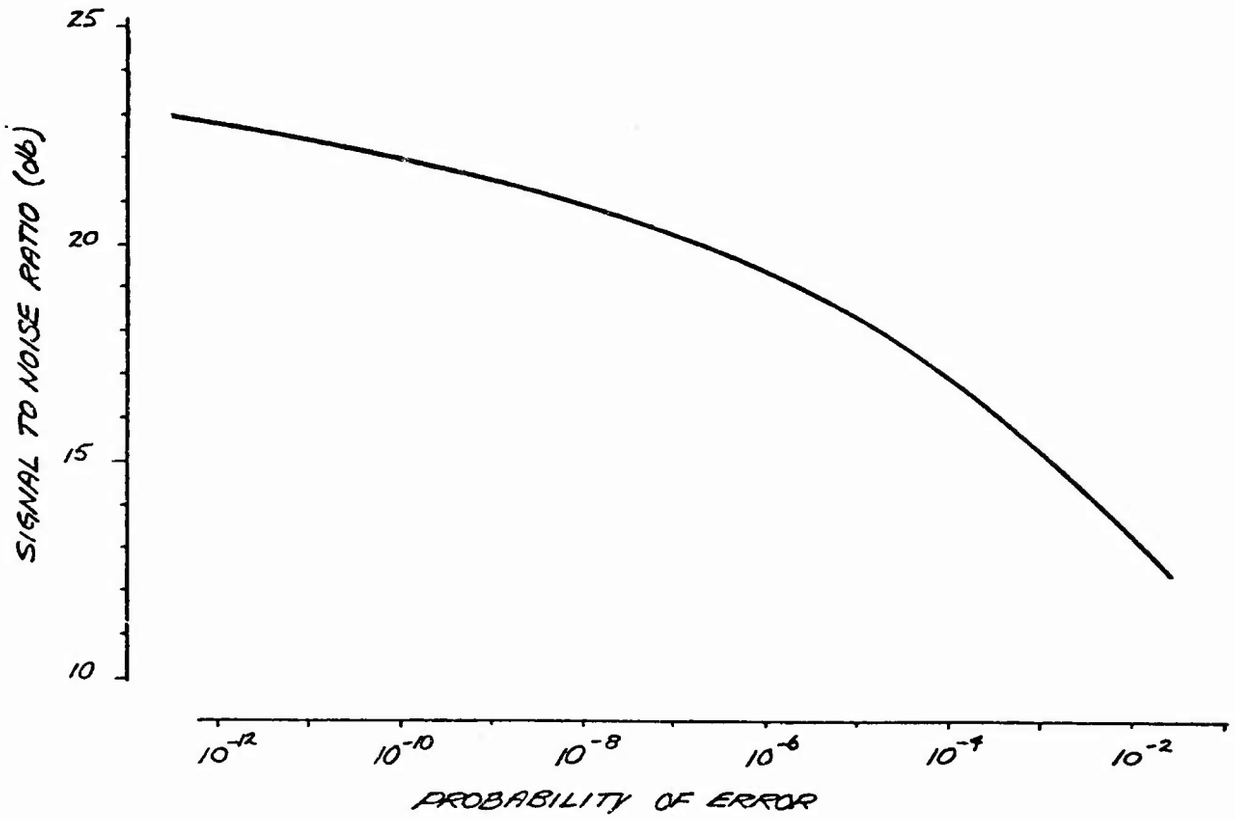

Fig. 5 - Theoretical Error Rate for Binary System

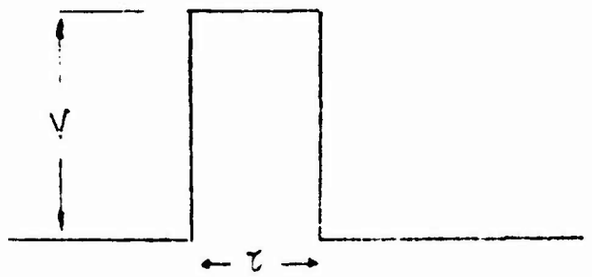

FIG. 6 - IDEALIZED WAVEFORM OF SENSOR OUTPUT SIGNALS

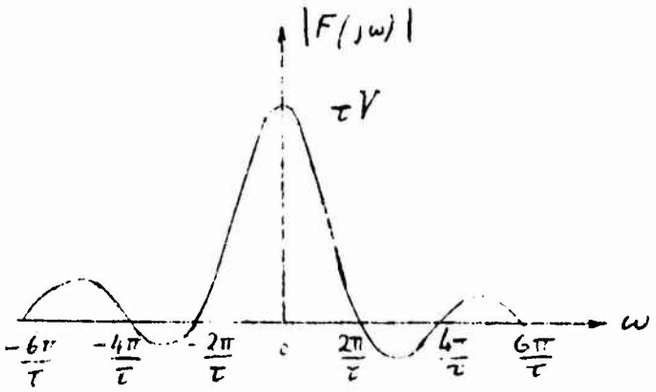

FIG. 7 - FOURIER SPECTRUM OF RECTANGULAR WAVEFORM OF FIG. 6

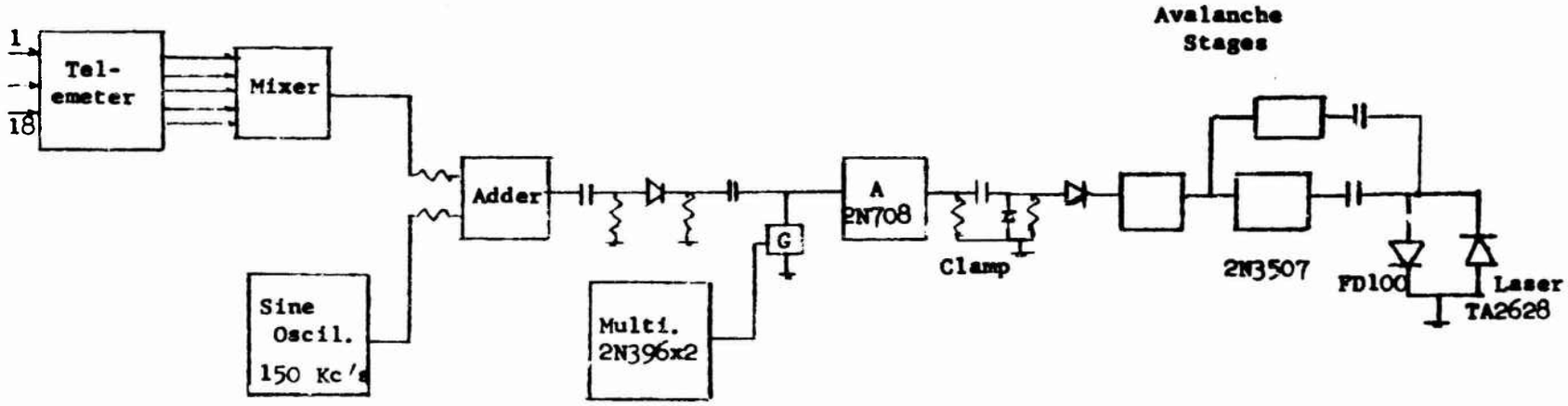

FIG. 8 - BLOCK DIAGRAM OF LASER TELEMETER CIRCUIT

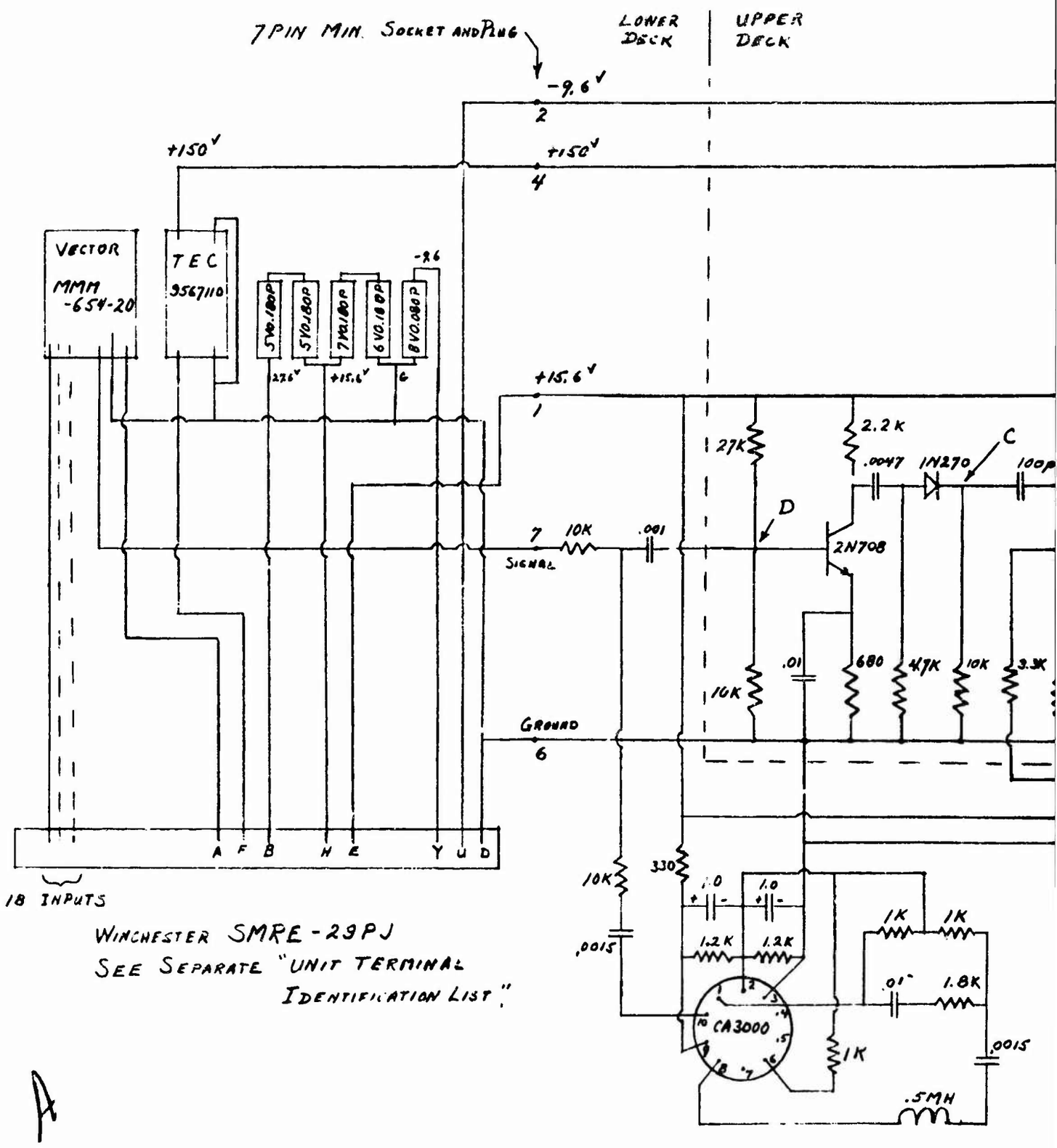

ITTFL D21(N)-V REV. 6-64

EXCEPT AS MAY BE OTHERWISE PROVIDED BY CONTRACT, THESE DRAWINGS AND SPECIFICATIONS ARE THE PROPERTY OF ITT FEDERAL LABORATORIES, ARE ISSUED IN STRICT CONFIDENCE, AND SHALL NOT BE REPRODUCED, OR COPIED, OR USED AS THE BASIS FOR THE MANUFACTURE OR SALE OF APPARATUS WITHOUT PERMISSION.

DRAWN BY [signature]	DATE 5-1-67
CHECKED BY [signature]	DATE 5-1-67
APPROVED BY [signature]	DATE 5-1-67

OGILVY & PRESS, INC., BROOKLYN 17, N. Y. REPROVEL NO. 440M 26007

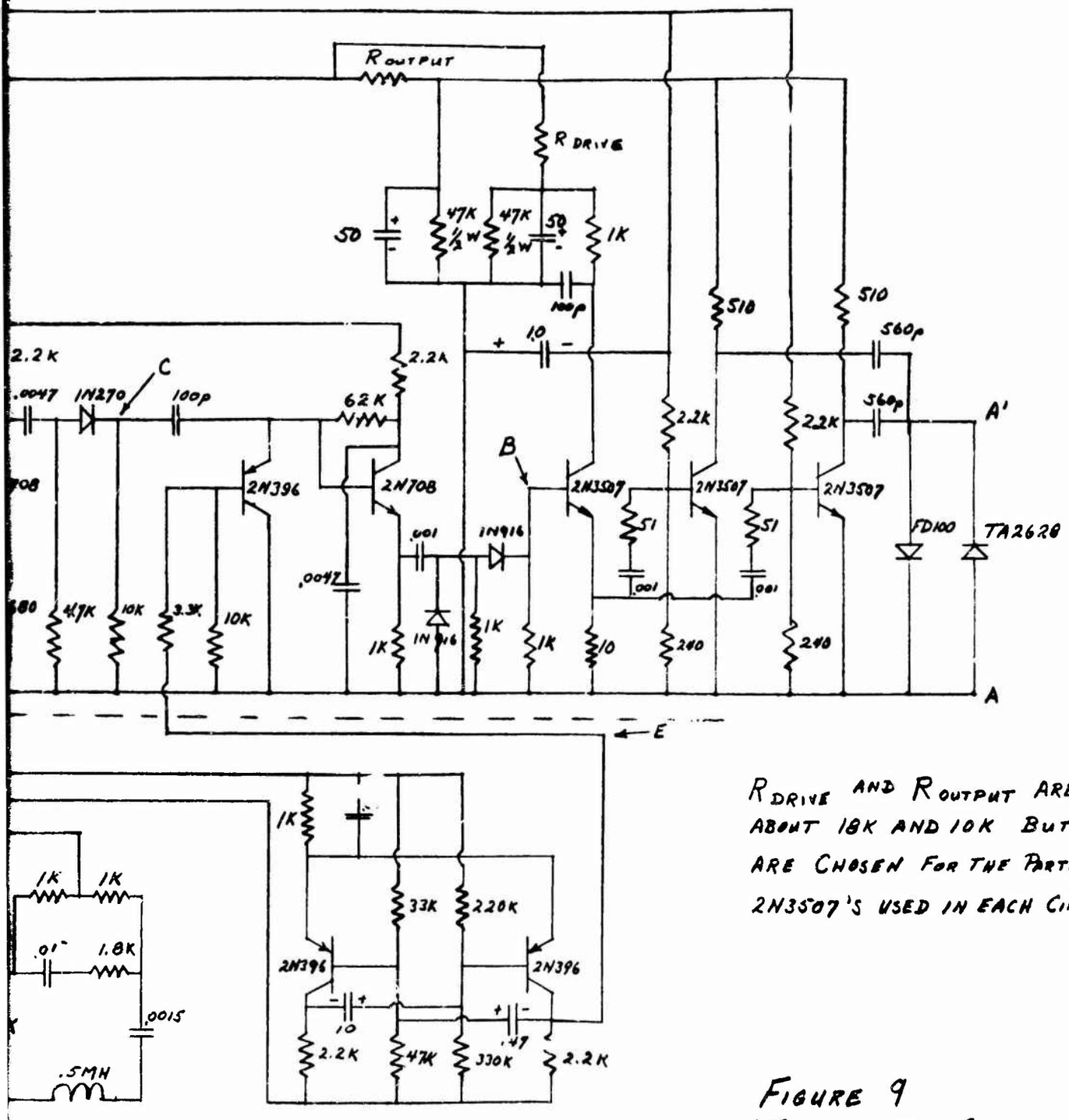

R_{DRIVE} AND R_{OUTPUT} ARE ABOUT 18K AND 10K BUT ARE CHOSEN FOR THE PARTICULAR 2N3507'S USED IN EACH CIRCUIT.

FIGURE 9
LT-18-357 CIRCUIT

DATE 5-1-67	ITT Federal LABORATORIES NUTLEY, NEW JERSEY, U.S.A. A DIVISION OF INTERNATIONAL TELEPHONE AND TELEGRAPH CORPORATION	SIZE B	CODE IDENT. NO. 90348
DATE 5-1-67		SCALE	SHEET 1 OF 3
DATE 5-1-67			

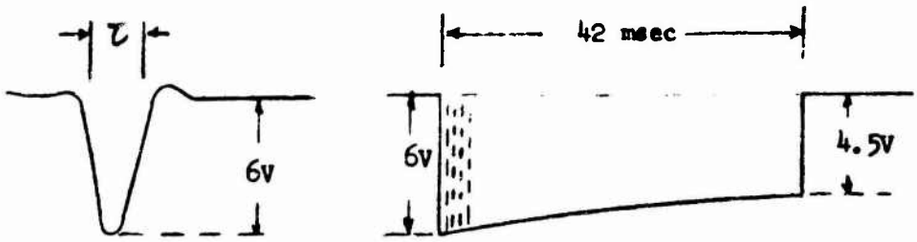

FIG. 10 - OUTPUT PULSE ACROSS 0.9-Ohm RESISTOR (AA' of Fig. 9)
τ = ~5 n sec (see text)

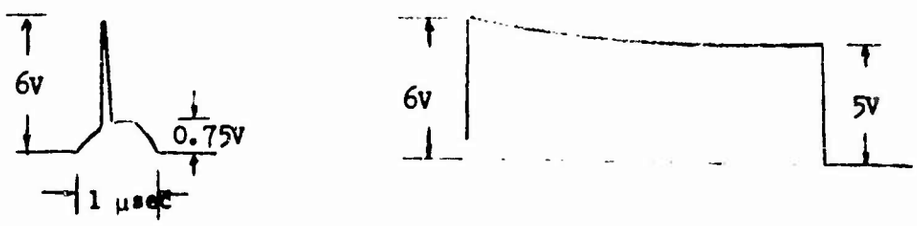

FIG. 11 - PULSE WAVEFORM AT POINT B (Fig. 9)

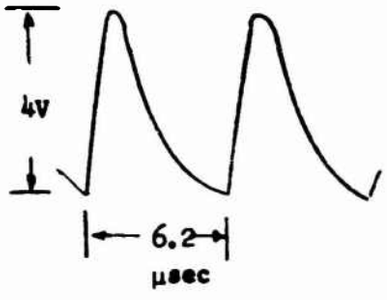

FIG. 12 - WAVEFORM AT POINT C OF FIG. 9

(No telemetry signal applied)

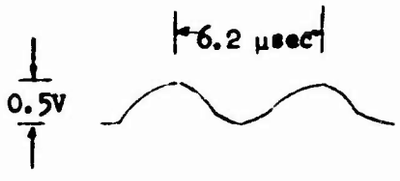

FIG. 13 - WAVEFORM AT POINT D OF FIG. 9

(No telemetry signal applied)

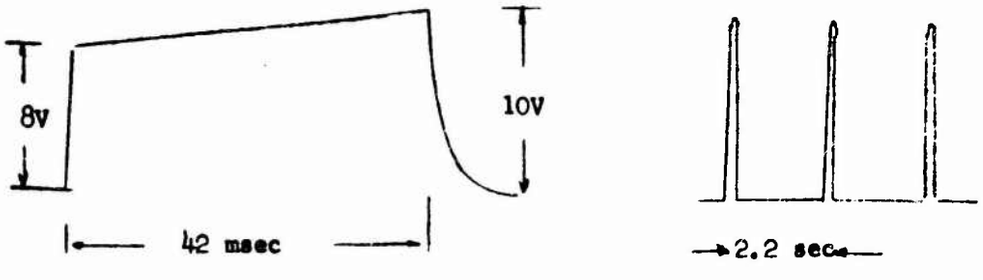

FIG. 14 - WAVEFORM AT POINT E OF FIG. 9

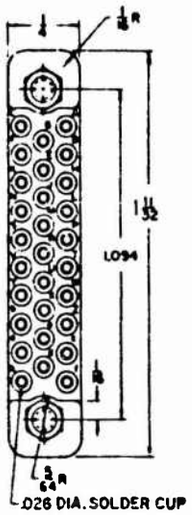

Male

Female

UNIT TERMINAL IDENTIFICATION LIST

(ITT Federal Labs)

A	+27.5V to Vector Unit
B	+27.5V From Battery
C	Chassis Ground (through Vector Unit)
D	Battery & System Ground
E	+15.6 to Pin No.1 Potted Circuit
F	+27.5V to DC-DC Converter
H	+15.6V From Battery
J	INPUT to Channel No. 3 - 0.73 kc
K	INPUT to Channel No. 1 - 0.40 kc
L	INPUT to Channel No. 5 - 1.3 kc
M	INPUT to Channel No. 9 - 3.9 kc
N	INPUT to Channel No. 7 - 2.3 kc
P	INPUT to Channel No. 11 - 7.35 kc
R	INPUT to Channel No. 15 - 30.0 kc
S	INPUT to Channel No. 13 - 14.5 kc
T	INPUT to Channel No. 17 - 52.5 kc
U	- 9.6V to Pin No. 2 Potted Circuit
V	N. C.
W	INPUT to Channel No. 16 - 40.0 kc
X	INPUT to Channel No. 14 - 22.0 kc
Y	- 9.6V From Battery
Z	INPUT to Channel No. 18 - 70.0 kc
a	INPUT to Channel No. 8 - 3.0 kc
b	INPUT to Channel No. 12 - 10.5 kc
c	INPUT to Channel No. 10 - 5.4 kc
d	INPUT to Channel No. 2 - 0.56 kc
e	INPUT to Channel No. 6 - 1.7 kc
f	INPUT to Channel No. 4 - 0.96 kc
h	N. C.

Figure 16

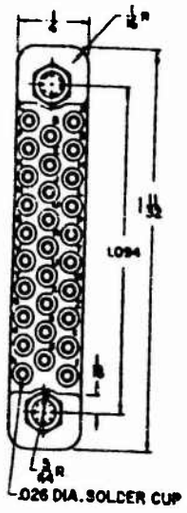

Male

Female

OPERATING JUMPER PLUG

(ITT Federal Labs)

A		
B		
D	Signal Ground	
E		
F		
H		
J	INPUT to Channel No.	3 - 0.73 kc
K	INPUT to Channel No.	1 - 0.40 kc
L	INPUT to Channel No.	5 - 1.3 kc
M	INPUT to Channel No.	9 - 3.9 kc
N	INPUT to Channel No.	7 - 2.3 kc
P	INPUT to Channel No.	11 - 7.35 kc
R	INPUT to Channel No.	15 - 30.0 kc
S	INPUT to Channel No.	13 - 14.5 kc
T	INPUT to Channel No.	17 - 52.5 kc
U		
W	INPUT to Channel No.	16 - 40.0 kc
X	INPUT to Channel No.	14 - 22.0 kc
Y		
Z	INPUT to Channel No.	18 - 70.0 kc
a	INPUT to Channel No.	8 - 3.0 kc
b	INPUT to Channel No.	12 - 10.5 kc
c	INPUT to Channel No.	10 - 5.4 kc
d	INPUT to Channel No.	2 - 0.56 kc
e	INPUT to Channel No.	6 - 1.7 kc
f	INPUT to Channel No.	4 - 0.96 kc

Figure 17

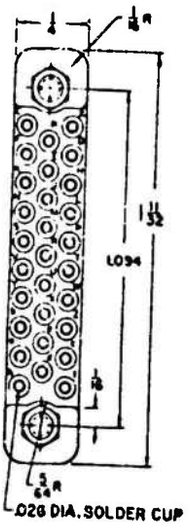

Male

Female

BATTERY CHARGING PLUG

(ITT Federal Labs)

B	+27.5V (Orange)
D	Ground (Brown)
Y	- 9.6V (Green)

-Other terminals not connected-

FIGURE 18

FIG. 19 - SIDE VIEW OF LASER TELEMETER LT-18-357

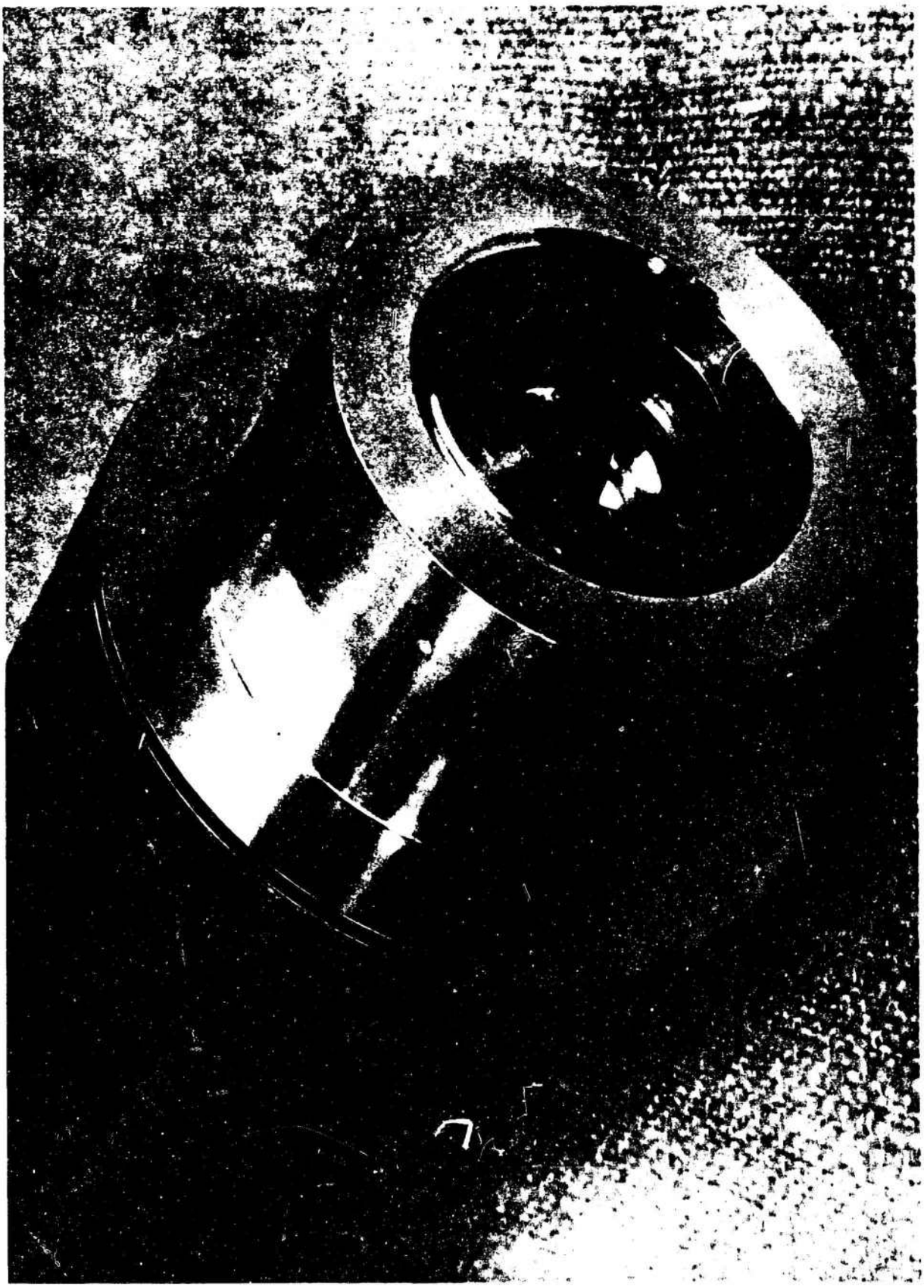

FIG. 20 - TOP VIEW OF LASER TELEMETER LT-18-357

APPENDIX

DETAILED MECHANICAL DRAWINGS

Laser Telemeter Unit LT-18-357

ITTFL D21(N)-V REV. 6-64

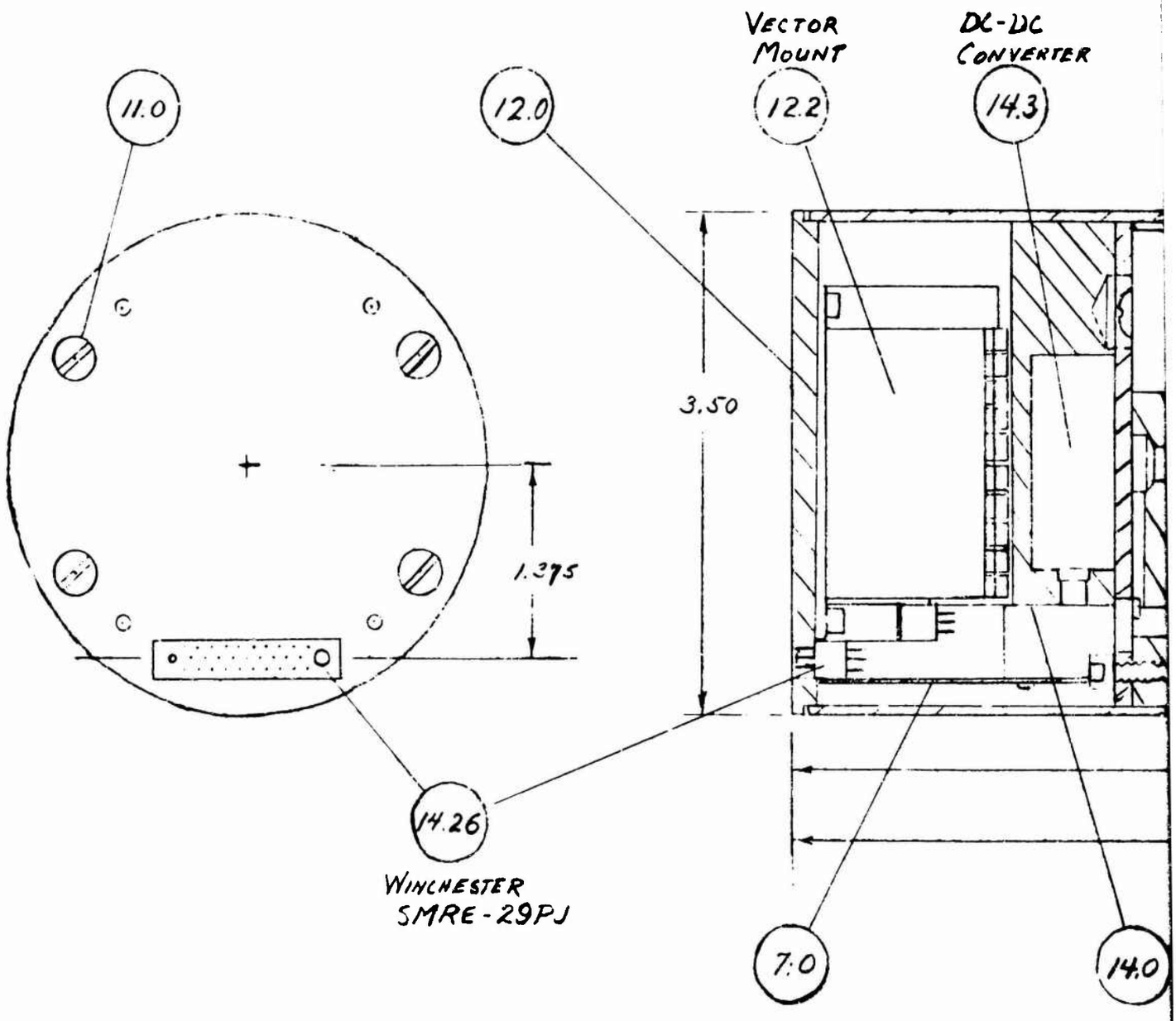

A

EXCEPT AS MAY BE OTHERWISE PROVIDED BY CONTRACT, THESE DRAWINGS AND SPECIFICATIONS ARE THE PROPERTY OF ITT FEDERAL LABORATORIES, ARE ISSUED IN STRICT CONFIDENCE, AND SHALL NOT BE REPRODUCED, OR COPIED, OR USED AS THE BASIS FOR THE MANUFACTURE OR SALE OF APPARATUS WITHOUT PERMISSION.

DRAWN BY Bill Wallace	DATE 5-2-67
CHECKED BY	DATE
APPROVED BY	DATE

OGILVIE PRESS, INC., BROOKLYN 17, N. Y. REPROVEL NO 440M 26867

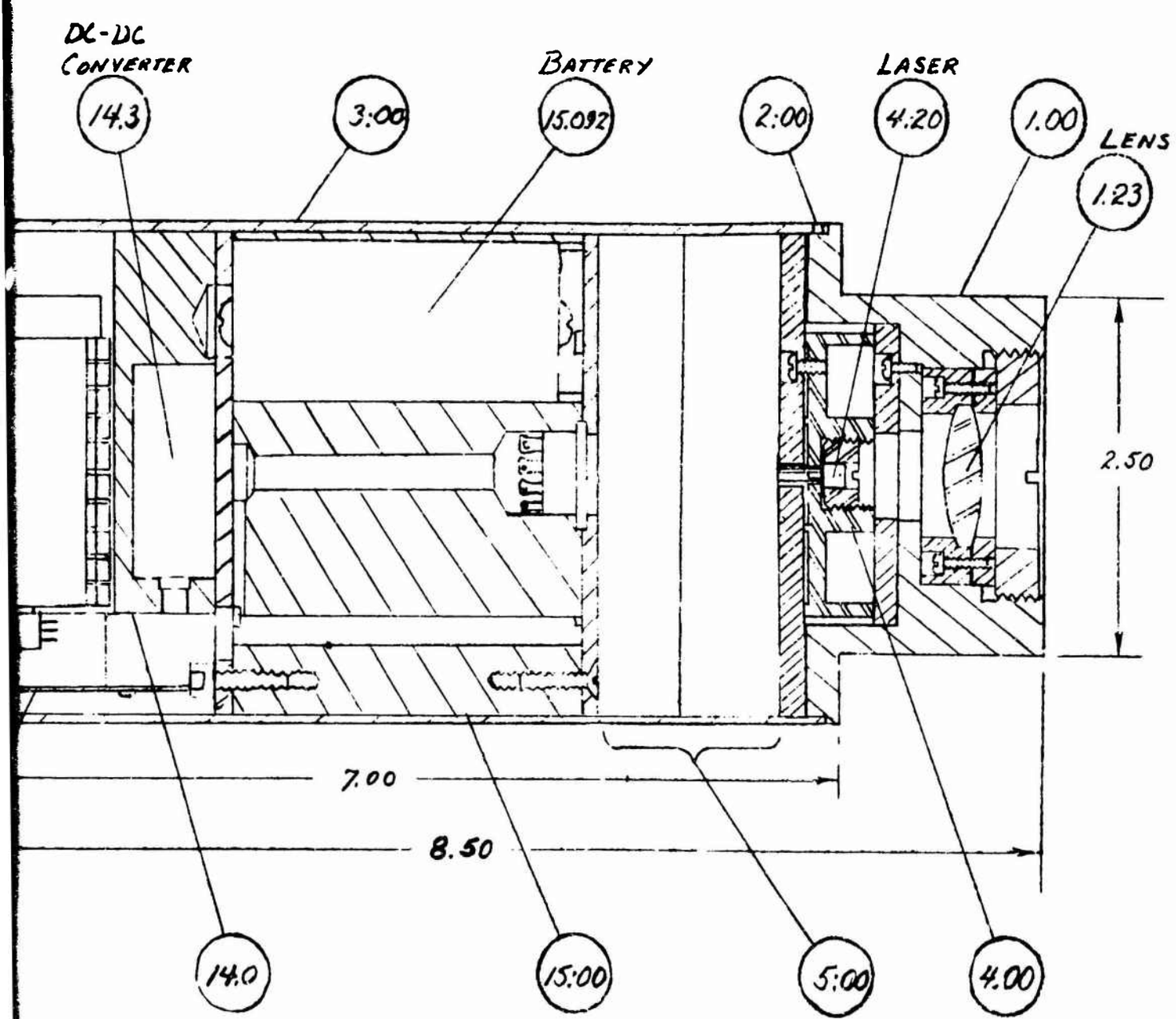

- FIG. 15 -

DATE 9-2-87	ITT Federal LABORATORIES NUTLEY, NEW JERSEY, U.S.A. A DIVISION OF INTERNATIONAL TELEPHONE AND TELEGRAPH CORPORATION	SIZE B	CODE IDENT. NO. 90348	LT-18-357
DATE		SCALE		SHEET 1 OF 7
DATE				

ITEM	DESCRIPTION	DWG. NO. OR OTHER	ASSEMBLIES PER UNIT	QUANTITY/ ASSEMBLY
0.00.000	Laser Telemeter	LT-18-357	-	-
1.00	Nose - Lens Assembly	-None-	1	
1.10	Jam Nut, Lens	RM 1.75.30-01A		1
1.20	Lens Assembly	-None-	1	
1.21	Screws	No.2 56 x 5/16 Fil.H.StSt		6
1.22	Clamp Ring	RM 1.50.19 - 01A		1
1.23	Lens	25mm Dia. x 20m F.L (Edmund Scientific 94.340)		1
1.24	Silastic	Dow Corning "Stops Leaks"		-
1.25	Collar	RM 1.50.38 - 01A		1
1.30	Screws	No.2 56 x 1/4 Pan H. StSt		3
1.40	Pad, Nose	FM .18321 - 08A		1
1.50	Nose	RM 3.501.8 - 01A		1
2.00	Screws	No.2 56 x 1/16 Bristol Set		3
3.00	Case	T 3.50.065 A-6.78		1
4.00	Laser Head Assembly	-None-	1	
4.10	Jam Nut, Laser			
4.20	Laser	RCA Type TA 2628		1
4.30	Grease	Silicon Stopcock or Heat-Sink Compound		-

PART AND MATERIAL LIST
L1 18-357
2 May 1967

M N Wallace

PART AND MATERIAL LIST
LT-18-357
2 May 1967

ITEM	DESCRIPTION	DWG. NO. OR OTHER	ASSEMBLIES PER UNIT	QUANTITY/ ASSEMBLY
4.40	Sleeve	5/16" Lg Penntube AWG20TW		1
4.50	Screw	No.2 56 x 1/4 PanH.StSt		3
4.60	Head Flange	FM .1833.4 - 08A		1
4.70	Head, Cooling	RM 1.98.50 - 08A		1
5.00	Circuit Assembly	See Inst.Book & Mfg. Inst.	1	
5.10	Silastic	Dow Corning "Stops Leaks"		-
5.20	Screw	No.6 32 x 1-1/4 PanH. StSt		4
5.30	Lower Deck Assembly	-None-	1	
5.31	Potting	High-Temp. 40%,RCM-2 60%CA-S		-
5.32	Nickel Ribbon	.010 x .030 or Equiv.		-
5.33	Top Disc	FM .0323.37 - 01A Item 3		1
5.34	Bushing	RM .250A - 01A Item 1		4
5.35	Nickel Ribbon	.010 x .030 or Equiv.		-
5.36.00	Components	Weldable if possible	-	-
.10	Plug	Alden No. 904MB		1
.20	Integrated Circuit	RCA No. CA3000		1
.30	Transistor	2N396		2
.40	Inductor	.5MH Delvan No.2534-16		1
.50	Capacitors	-	-	-
.51		.001 MF 200 V - CK05CW102K		1
.52		.0015MF 200V - CK06CW152K		2
.53		.01 MF 200V - CK06CW103K		2
.54		.47 MF 35V - CS13BF474K		1
.55		1.0 MF 35V - CS13BF105K		2
.56		10.0 MF 25V - TI-4T301		1

PART AND MATERIAL LIST
LT-18-357
2 May 1967

ITEM	DESCRIPTION	DWG. NO. OR OTHER	ASSEMBLIES PER UNIT	QUANTITY/ ASSEMBLY
5.36.600	Resistors	1/4W Unless Specified		
.601		330-Ohm 1/4-W		1
.602		1KOhm 1/4-W		4
.603		1.2KOhm 1/4-W		2
.604		1.8KOhm 1/4-W		1
.605		2.2KOhm 1/4-W		2
.606		10.0KOhm 1/4-W		2
.607		33.0KOhm 1/4-W		1
.608		47.0KOhm 1/4-W		1
.609		220.0KOhm 1/4-W		1
.610		330.0KOhm 1/4-W		1
5.37.0	Bottom Disc	FM .0323.37 - 01A Item 4		1
5.40	Upper Deck Assembly	-None-	1	
5.41	Potting	High Temp CA-S (60%)	-	-
		High Temp RCM-2 (40%)	-	-
5.42	Top Disc	FM .0323.37 - 01A Item 1		1
5.43	Nickel Ribbon	.010 x .030		-
5.44	Bushing	RM .250A - 01A Item 2		4
5.45.0	Components	All weldable if possible		
.1	Socket	Elco 05-3303 (Mod.)		1
.2	Diode	IN270		1
		1N916		2
		FD100		1
.3	Transistor	2N3507 Selected		3
		2N708		2
		2N396		1

PART AND MATERIAL LIST
LT-18-357
2 May 1967

ITEM	DESCRIPTION	DWG. NO. OR OTHER	ASSEMBLIES PER UNIT	QUANTITY/ ASSEMBLY
5.45.40	Capacitors			
.41		100pf 200V CK05CW101K		2
.42		560pf 200V CK05CW561K		2
.43		.001MF 200V CK05CW102K		3
.44		.0047MF 200V CK06CW472K		2
.45		.01MF 200V CK06CW103K		1
.46		1.0MF 35V CS13BF105K		1
.47		25.0MF 125V CL65CP250MP3		4
5.45.500	Resistors	1/4-Watt Unless Specified		
.501		10-Ohm		1
.502		51-Ohm		2
.503		240-Ohm		2
.504		680-Ohm		1
.505		1K-Ohm		4
.506		2.2K-Ohm		4
.507		3.3K-Ohm		1
.508		4.7K-Ohm		1
.509		10.0K-Ohm		3
.510		~ 12K-Ohm for R Output		1
.511		~ 18K-Ohm for R Drive		1
.512		27.0K Ohm		1
.513		47.0K Ohm - 1/2-Watt		2
.514		62.0K Ohm		1
5.46	Bottom Disc	FM .0323.37 - 01A Item 2		1
6.0	Screws	No.2 - 56 x 1/4 PanH. StSt		4
7.0	Plate	FM .0202.00 - 01A		1
8.0	Silastic	Dow-Corning "Stops Leaks"		-
9.0	Heat-Shrinkable Tubing			-
10.0	Solder			-
11.0	Screws	No.8 - 32 x 1/4 F.H. StSt		4

PART AND MATERIAL LIST
LT-18-357
2 May 1967

ITEM	DESCRIPTION	DWG. NO. OR OTHER	ASSEMBLIES PER UNIT	QUANTITY/ ASSEMBLY
12.0	Header Assembly	-None-	1	
12.1	Screws	No.4 - 40 x 1/4 Lg AllenCap		4
.2	Mount	Vector MMM 654-20		1
.3	Mixer-Amplifier	Vector MMA-11		1
.4.01	SCO Channel No. 1	Vector MMO-11		1
.02	" 2			1
.03	" 3			1
.04	" 4			1
.05	" 5			1
.06	" 6			1
.07	" 7			1
.08	" 8			1
.09	" 9			1
.10	" 10			1
.11	" 11			1
.12	" 12			1
.13	" 13			1
.14	" 14			1
.15	" 15			1
.16	" 16			1
.17	" 17			1
.18	" 18			1
13.5	Header	FM .1873.5 - 01A		1
13.6	Screw	No.8 - 32 x 1/2 F.H. StSt		4
14.0	Converter Block Assembly	-None-	1	
.1	Potting	High-Temp CA-S (60%)		-
		High-Temp RCM-2 (40%)		-
.20	Connectors, Wired			
.21	Silastic	Dow-Corning "Stops Leaks"		-
	Solder			-
.22	Wire	No.26 Std. Teflon Insu.		-
.23	Screws	No.2 56 x 1/4 Fil.H. StSt		2
.24	Connector	Winchester SMRE 29S		1
.25	Lock-Tite			-
.26	Connector	Winchester SMRE 29PJ (Mod.)		1

PART AND MATERIAL LIST
LT-18-357
2 May 1967

ITEM	DESCRIPTION	DWG. NO. OR OTHER	ASSEMBLIES PER UNIT	QUANTITY/ ASSEMBLY
14.3	DC-DC Converter	Transformer Electronics No. 2491-000		1
14.4	Converter Block	RM 3.372.2 - 01A		1
14.5	Screws	No.8 - 32 x 5/8 PanH.		2
14.6	Screws	No.8 - 32 x 3/8 Fil.Hd.		2
15.00	Battery Assembly	-None-	1	
.01	Screw	No.8 - 32 x 1/2 Allen Cap		1
.02	Lower Bulkhead	FM .1253.4 - 02A		1
.03	Potting	High-Temp CA-S (60%)		-
		High-Temp RCM-2 (40%)		-
.04	Wire			
.05.1	Spacer	TM 1.13.063 - 01A Item 1		5
.2		Item 2		1
.3		Item 3		1
.4		Item 4		2
.06	Screws	No.8 - 32 F.H. StSt x 1/2 Lg.		3
.07	Upper Bulkhead	FM .1253.4 - 02A		1
.080	Socket Assembly	-None-	1	
.081	Silastic	Dow Corning "Stops Leaks"		-
.082	Solder			
.083	Wire	No.26 - Strd. Teflon Inv.		-
.084	Socket	Alden 407		1
15.091	Battery	Gulton 5V 0.180P		2
.092		Gulton 7V 0.180P		1
.093		Gulton 6V 0.180P		1
.094		Gulton 8V 0.080P		1
15.10	Block, Battery	RM 3.372.6 - 01A		1

ITTFL 015 (%) REV. 6/64

DRAWING NUMBER

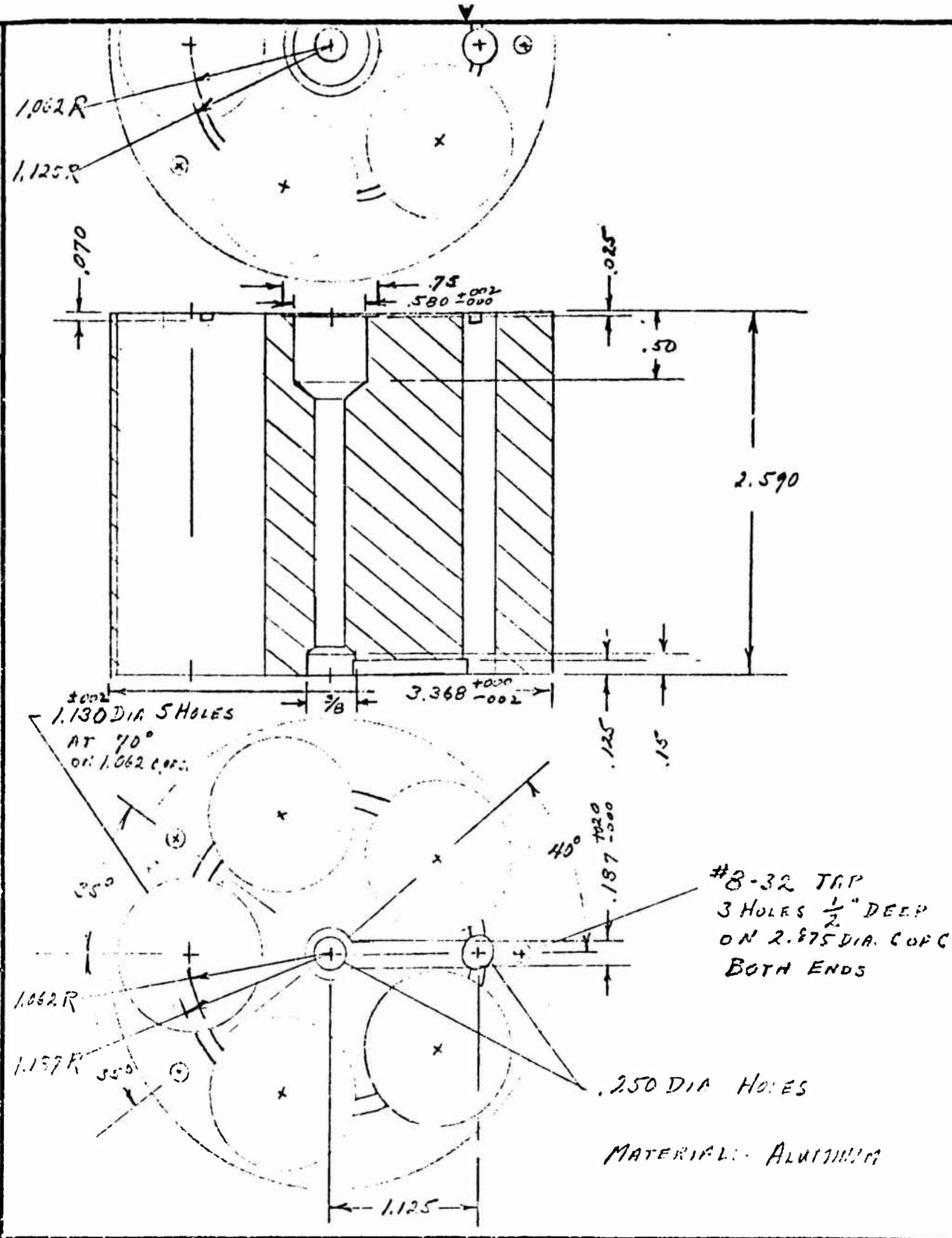

EXCEPT AS MAY BE OTHERWISE PROVIDED BY CONTRACT, THESE DRAWINGS AND SPECIFICATIONS ARE THE PROPERTY OF ITT FEDERAL LABORATORIES, ARE ISSUED IN STRICT CONFIDENCE, AND SHALL NOT BE REPRODUCED, OR COPIED, OR USED AS THE BASIS FOR THE MANUFACTURE OR SALE OF APPARATUS WITHOUT PERMISSION.

ITT Federal LABORATORIES
A DIV. OF INT. TEL. & TEL. CORP.

TOLERANCES UNLESS OTHERWISE SPECIFIED	DIMENSION	UNDER 6	6 TO 24	OVER 24	FRACTIONS
	2 PLACE DEC.	± .02	± .03	± .06	
	3 PLACE DEC.	± .005	± .010	± .015	

BLOCK, BATTERY

USED ON

PREPARED BY DATE 2-27-64

CHECKED BY DATE

CODE IDENT. NO. 90348

DWG. SIZE A

RM 3372.6-01A

SHEET

OCILVIE PRESS, INC., BROOKLYN 17, N. Y. REPROVEL NO. 440H

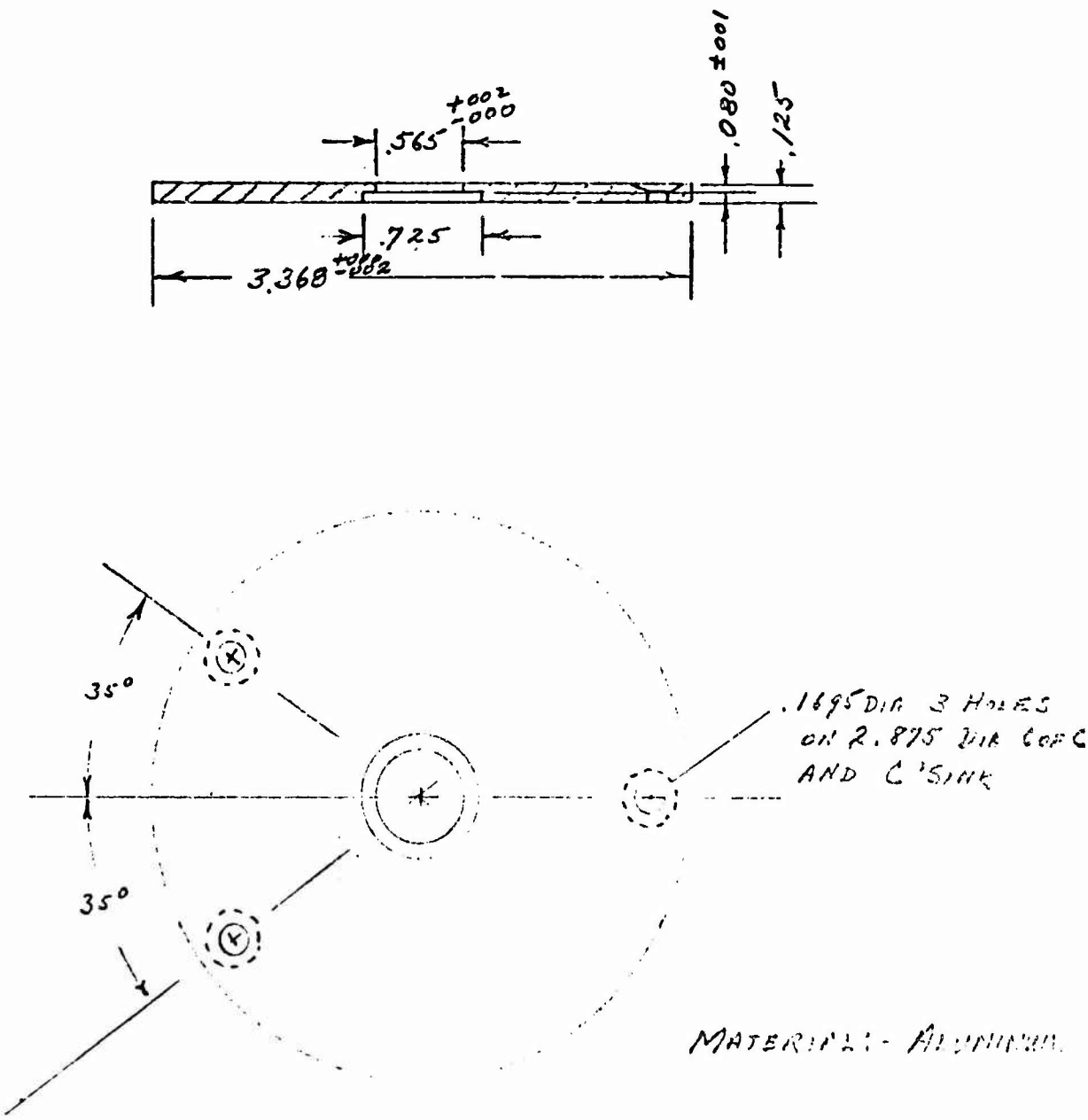

TOLERANCES UNLESS OTHERWISE SPECIFIED	DIMENSION	UNDER 6	6 TO 24	OVER 24	FRACTIONS	BULKHEAD, UPPER
	2 PLACE DEC.	± .02	± .03	± .06		
	3 PLACE DEC.	± .005	± .010	± .015		

USED ON	CODE IDENT. NO.	DWG.	
PREPARED BY [illegible] DATE 2-27-67	90348	A SIZE	FM.125 3.4-02A
CHECKED BY DATE			SHEET

DRAWING NUMBER

EXCEPT AS MAY BE OTHERWISE PROVIDED BY CONTRACT, THESE DRAWINGS AND SPECIFICATIONS ARE THE PROPERTY OF ITT FEDERAL LABORATORIES, ARE ISSUED IN STRICT CONFIDENCE, AND SHALL NOT BE REPRODUCED, OR COPIED, OR USED AS THE BASIS FOR THE MANUFACTURE OR SALE OF APPARATUS WITHOUT PERMISSION.

Federal LABORATORIES
A DIV. OF INT. TEL. & TEL. CORP.

GILVIE PRESS, INC., BROOKLYN 17, N. Y. REPROVEL NO. 440M

ITTFL DIS (X) REV. 6/64

DRAWING NUMBER

EXCEPT AS MAY BE OTHERWISE PROVIDED BY CONTRACT, THESE DRAWINGS AND SPECIFICATIONS ARE THE PROPERTY OF ITT FEDERAL LABORATORIES, ARE ISSUED IN STRICT CONFIDENCE, AND SHALL NOT BE REPRODUCED, OR COPIED, OR USED AS THE BASIS FOR THE MANUFACTURE OR SALE OF APPARATUS WITHOUT PERMISSION.

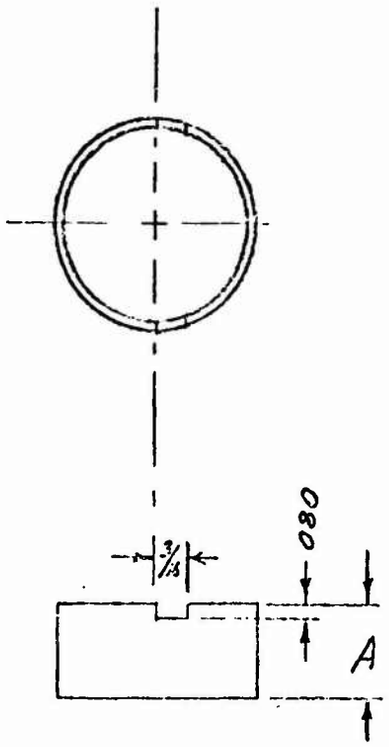

ITEM	A	REQ PER UNIT
1	.185	5
2	.300	1
3	.400	1
4	.600	2

MATERIAL: PHENOLIC, LAM. NAT TUBE GRADE E
1⅛ OD x 1/16 WALL

ITT Federal LABORATORIES
A DIV. OF INT. TEL. & TEL. CORP.

TOLERANCES UNLESS OTHERWISE SPECIFIED	DIMENSION	UNDER 6	6 TO 24	OVER 24	FRACTIONS
	2 PLACE DEC.	± .02	± .03	± .06	
	3 PLACE DEC.	± .00	± .010	± .015	

SPACER

USED ON

PREPARED BY [signature] DATE 2-27-67

CHECKED BY DATE

CODE IDENT. NO. 90348

DWG SIZE A

T11 1.13.063-01A

SHEET

OGILVIE PRESS, INC., BROOKLYN 17, N. Y. REPROVEL NO. 440H

ITTFL 015 (X) REV. 6/64

DRAWING NUMBER

EXCEPT AS MAY BE OTHERWISE PROVIDED BY CONTRACT, THESE DRAWINGS AND SPECIFICATIONS ARE THE PROPERTY OF ITT FEDERAL LABORATORIES, ARE ISSUED IN STRICT CONFIDENCE, AND SHALL NOT BE REPRODUCED, OR COPIED, OR USED AS THE BASIS FOR THE MANUFACTURE OR SALE OF APPARATUS WITHOUT PERMISSION.

ITT Federal LABORATORIES
A DIV. OF INT. TEL. & TEL. CORP.

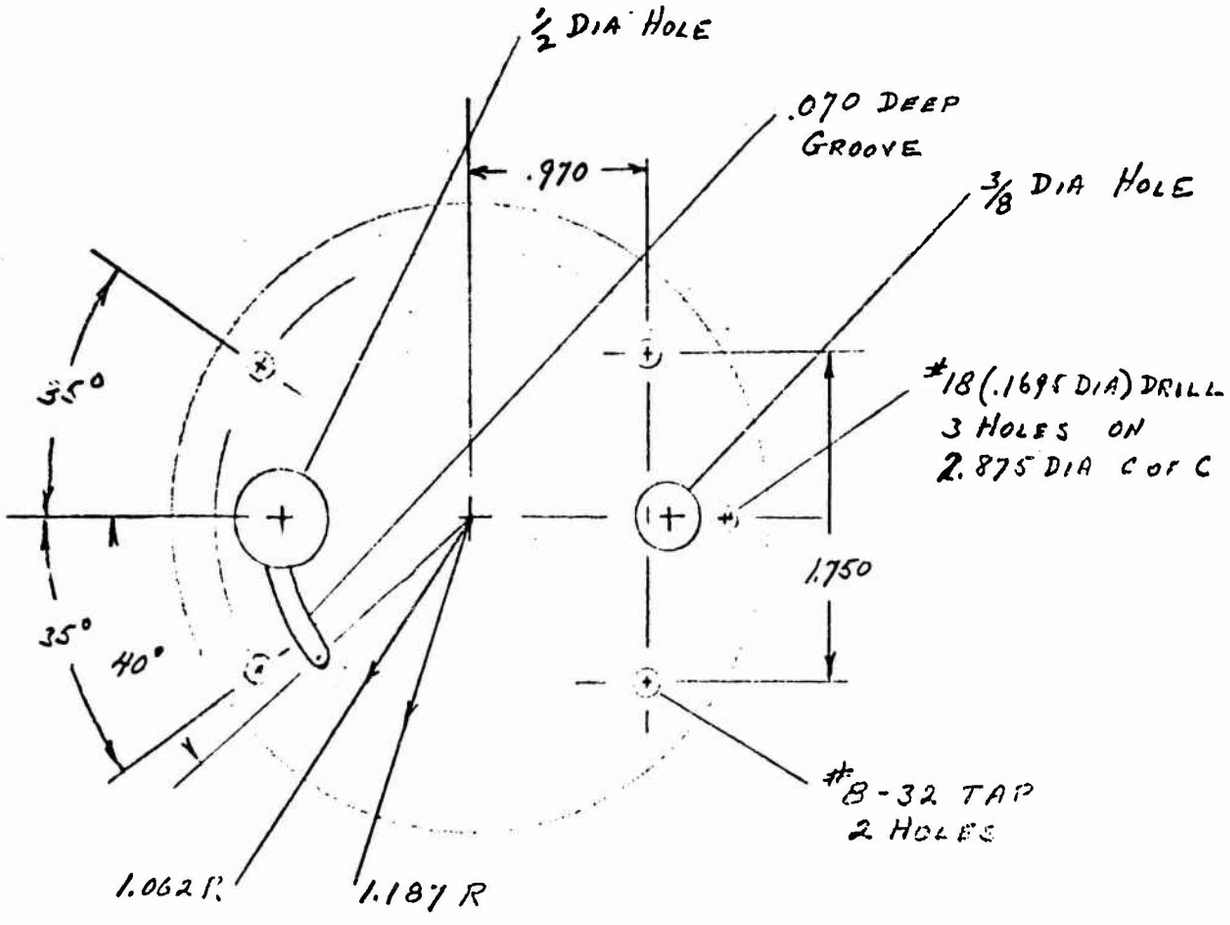

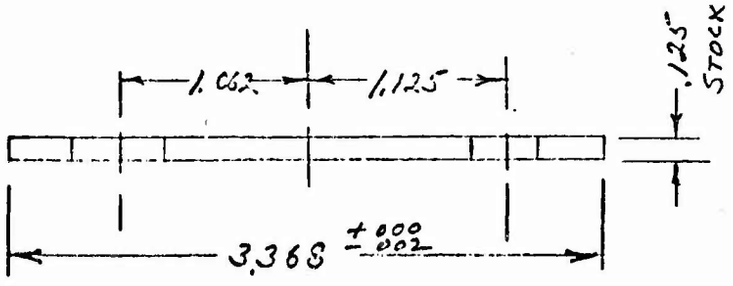

MATERIAL :- ALUMINUM

TOLERANCES UNLESS OTHERWISE SPECIFIED	DIMENSION	UNDER 6	6 TO 24	OVER 24	FRACTIONS
	2 PLACE DEC.	± .02	± .03	± .06	
	3 PLACE DEC.	± .005	± .010	± .015	

BULKHEAD, LOWER

USED ON

PREPARED BY [illegible] DATE 2-27-67

CHECKED BY DATE

CODE IDENT. NO. 90348

DWG. SIZE A

F/1.125 3.4-02A

SHEET

OGILVIE PRESS, INC., BROOKLYN 17 N. Y. REPROVEL NO. 440M

ITTFL DIS (X) REV. 6/64

DRAWING NUMBER

EXCEPT AS MAY BE OTHERWISE PROVIDED BY CONTRACT, THESE DRAWINGS AND SPECIFICATIONS ARE THE PROPERTY OF ITT FEDERAL LAB. ORATORIES, ARE ISSUED IN STRICT CONFIDENCE, AND SHALL NOT BE REPRODUCED, OR COPIED, OR USED AS THE BASIS FOR THE MANUFACTURE OR SALE OF APPARATUS WITHOUT PERMISSION.

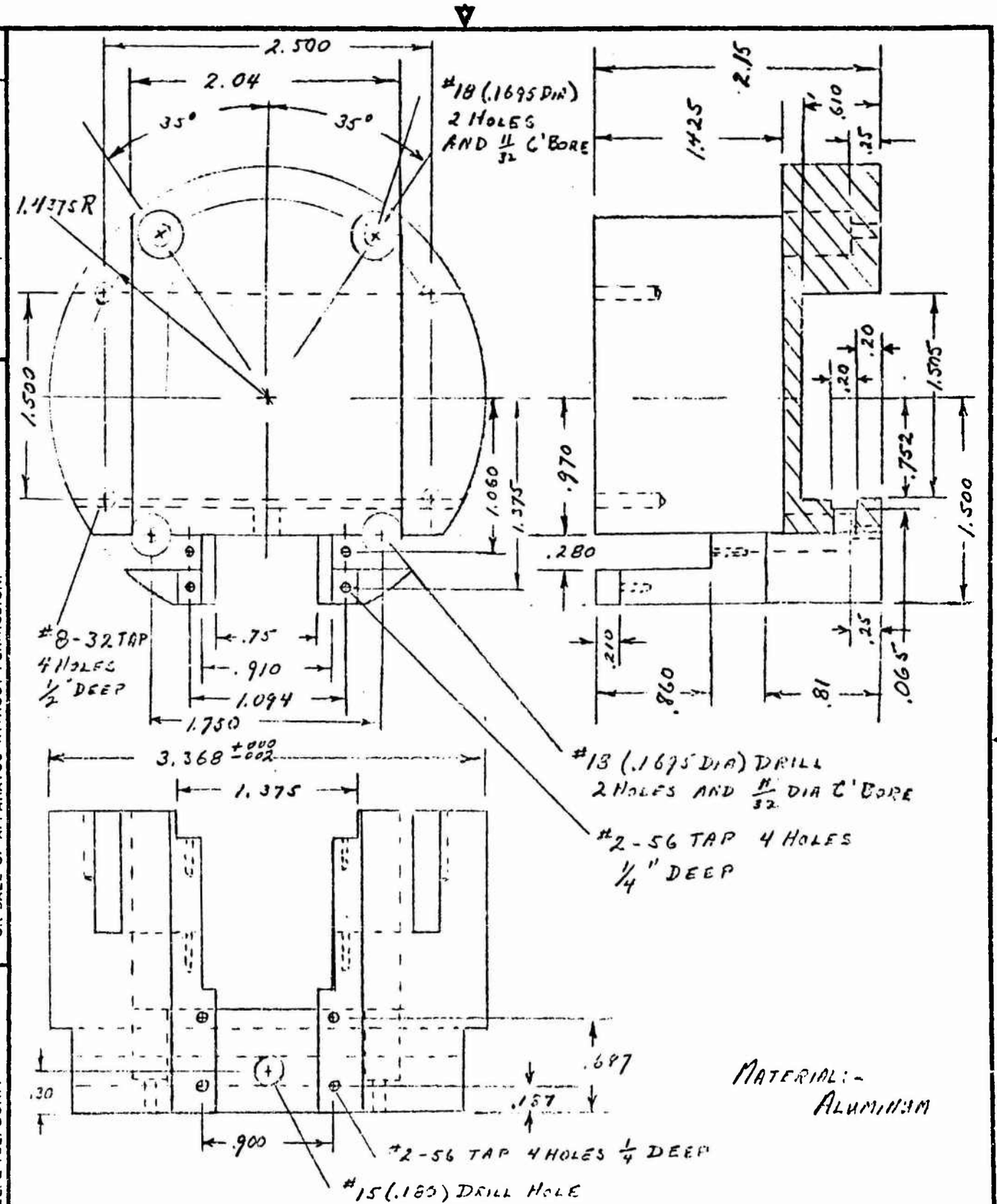

MATERIAL:- ALUMINUM

TOLERANCES UNLESS OTHERWISE SPECIFIED	DIMENSION	UNDER 6	6 TO 24	OVER 24	FRACTIONS
	2 PLACE DEC.	± .02	± .03	± .06	
	3 PLACE DEC.	± .005	± .010	± .015	

CONVERTER BLOCK

USED ON

PREPARED BY: [illegible] DATE: 3-2-67

CHECKED BY DATE

CODE IDENT. NO. 90348

DWG. SIZE A

RM 3.37 2.2 - 01A

SHEET

Federal LABORATORIES
A DIV. OF INT. TEL. & TEL. CORP.

OGILVIE PRESS, INC., BROOKLYN 17, N. Y. REPROVEL NO. 440M

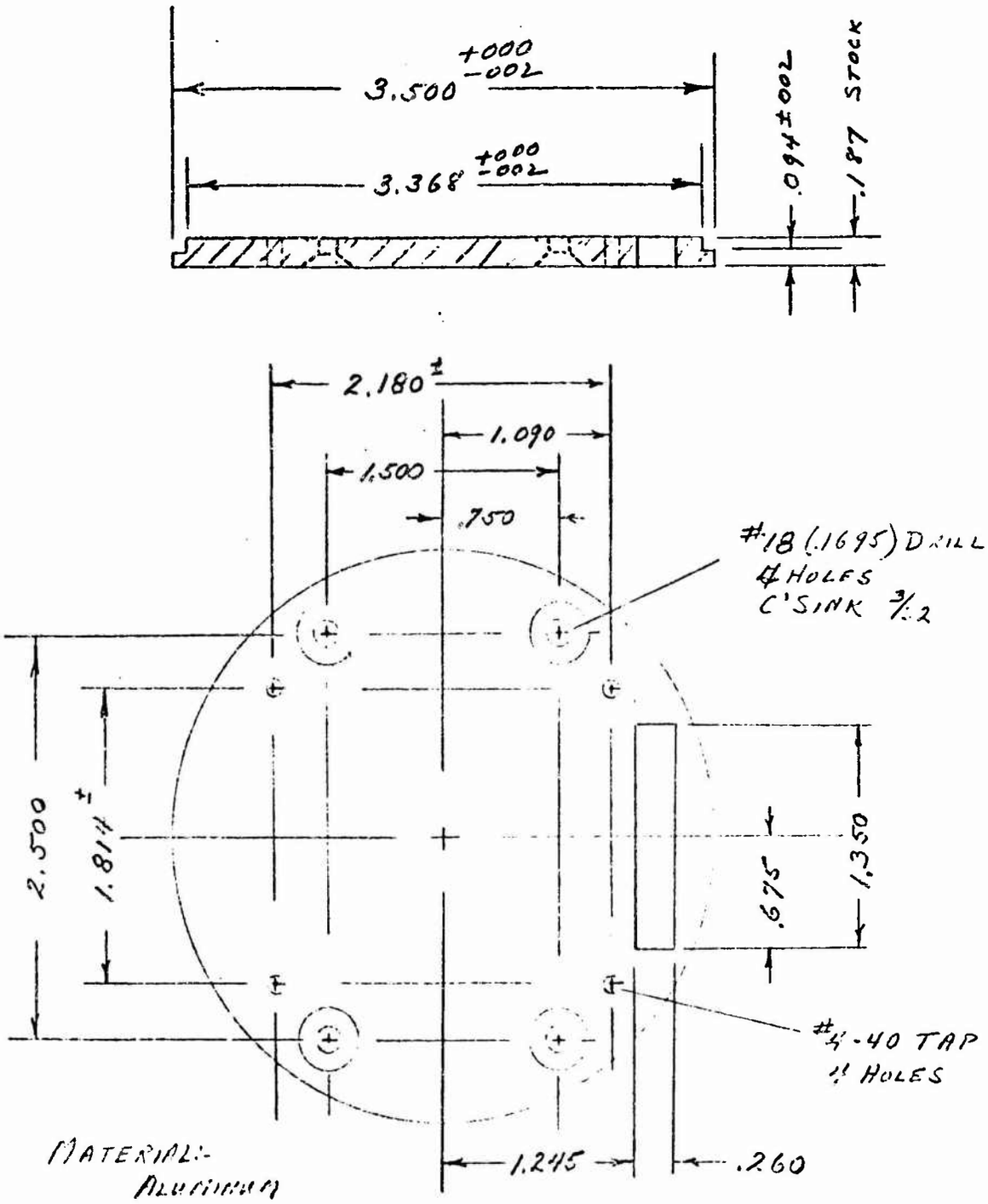

TOLERANCES UNLESS OTHERWISE SPECIFIED	DIMENSION	UNDER 6	6 TO 24	OVER 24	FRACTIONS	HEADER
	2 PLACE DEC.	± .02	± .03	± .06		
	3 PLACE DEC.	± .005	± .010	± .015		

USED ON

PREPARED BY [illegible] DATE 3-3-67

CHECKED BY DATE

CODE IDENT. NO. 90348

DWG. SIZE A

FM 187 3.5-01A

SHEET

DRAWING NUMBER

ITTFL 915 (X) REV. 6/64

EXCEPT AS MAY BE OTHERWISE PROVIDED BY CONTRACT, THESE DRAWINGS AND SPECIFICATIONS ARE THE PROPERTY OF ITT FEDERAL LABORATORIES, ARE ISSUED IN STRICT CONFIDENCE, AND SHALL NOT BE REPRODUCED, OR COPIED, OR USED AS THE BASIS FOR THE MANUFACTURE OR SALE OF APPARATUS WITHOUT PERMISSION.

Federal LABORATORIES
A DIV. OF INT. TEL. & TEL. CORP.

OGILVIE PRESS, INC., BROOKLYN 17, N. Y. REPROVEL NO. 44GM

ITTFL DIS (R) REV. 6/64

DRAWING NUMBER

EXCEPT AS MAY BE OTHERWISE PROVIDED BY CONTRACT. THESE DRAWINGS AND SPECIFICATIONS ARE THE PROPERTY OF ITT FEDERAL LABORATORIES, ARE ISSUED IN STRICT CONFIDENCE, AND SHALL NOT BE REPRODUCED, OR COPIED, OR USED AS THE BASIS FOR THE MANUFACTURE OR SALE OF APPARATUS WITHOUT PERMISSION.

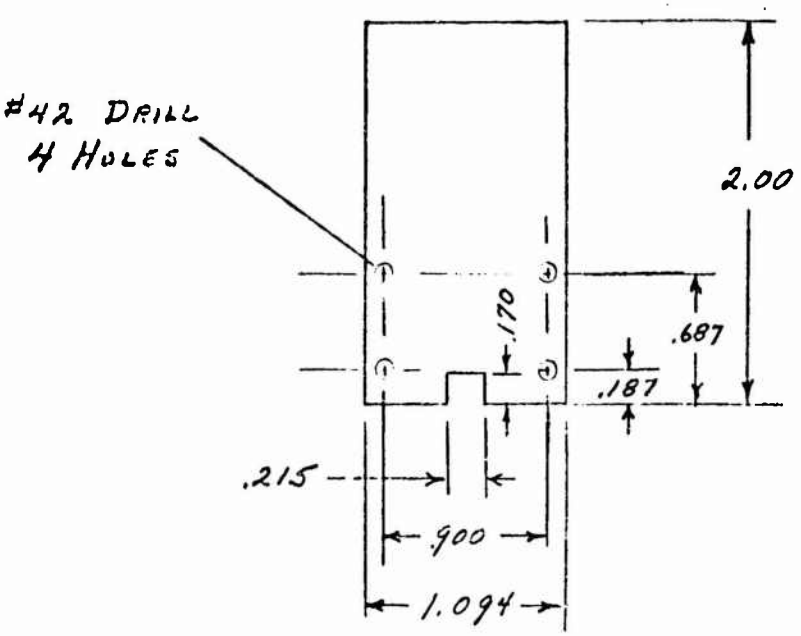

MATERIAL: .020" THICK ALUMINUM

ITT Federal LABORATORIES
A DIV. OF INT. TEL & TEL. CORP.

TOLERANCES UNLESS OTHERWISE SPECIFIED	DIMENSION	UNDER 6	6 TO 24	OVER 24	FRACTIONS
	2 PLACE DEC.	± .02	± .03	± .06	
	3 PLACE DEC.	± .005	± .010	± .015	

PLATE

USED ON

PREPARED BY [signature] DATE 5-1-67

CHECKED BY DATE

CODE IDENT. NO. 90348

DWG. SIZE A

FM.020 2.00-01A

SHEET

OGILVIE PRESS, INC., BROOKLYN 17, N. Y. REPROVEL NO. 440H

ITTFL DIS (R) REV. 3/64

DRAWING NUMBER

EXCEPT AS MAY BE OTHERWISE PROVIDED BY CONTRACT, THESE DRAWINGS AND SPECIFICATIONS ARE THE PROPERTY OF ITT FEDERAL LABORATORIES, ARE ISSUED IN STRICT CONFIDENCE, AND SHALL NOT BE REPRODUCED, OR COPIED, OR USED AS THE BASIS FOR THE MANUFACTURE OR SALE OF APPARATUS WITHOUT PERMISSION.

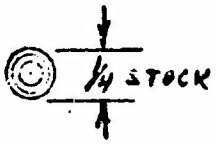

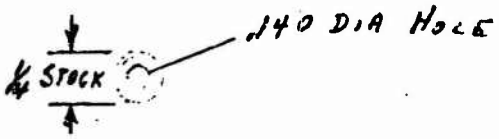

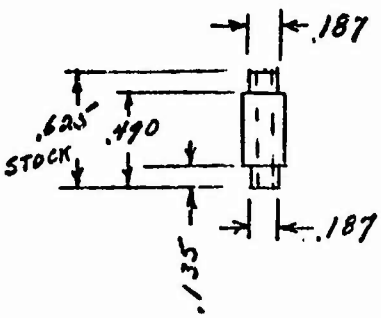

MATERIAL:-
1/4" DIA 5/8 LONG
#6-32 TAPPED
BRASS SPACER

ITEM 1

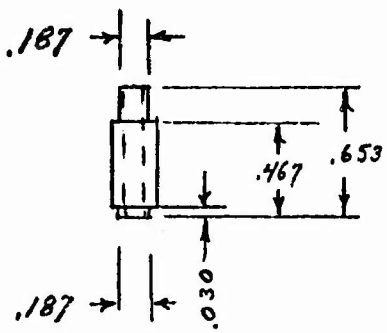

MATERIAL:
1/4 DIA X 3/4 LONG
#6-32 TAPPED
BRASS SPACER

ITEM 2

TOLERANCES UNLESS OTHERWISE SPECIFIED	DIMENSION	UNDER 6	6 TO 24	OVER 24	FRACTIONS
	2 PLACE DEC.	± .02	± .03	± .06	
	3 PLACE DEC.	± .005	± .010	± .015	

BUSHING

USED ON

PREPARED BY [illegible] DATE 2-22-67

CHECKED BY DATE

CODE IDENT. NO. 90348

DWG. A SIZE

RM.250A-01A

SHEET

ITT Federal LABORATORIES
A DIV. OF INT. TEL. & TEL. CORP.

OGILVIE PRESS, INC., BROOKLYN 17, N. Y. REPROVEL NO. 440M

ITTFL DIS '(X) REV. 6/64

DRAWING NUMBER

EXCEPT AS MAY BE OTHERWISE PROVIDED BY CONTRACT, THESE DRAWINGS AND SPECIFICATIONS ARE THE PROPERTY OF ITT FEDERAL LABORATORIES, ARE ISSUED IN STRICT CONFIDENCE, AND SHALL NOT BE REPRODUCED, OR COPIED, OR USED AS THE BASIS FOR THE MANUFACTURE OR SALE OF APPARATUS WITHOUT PERMISSION.

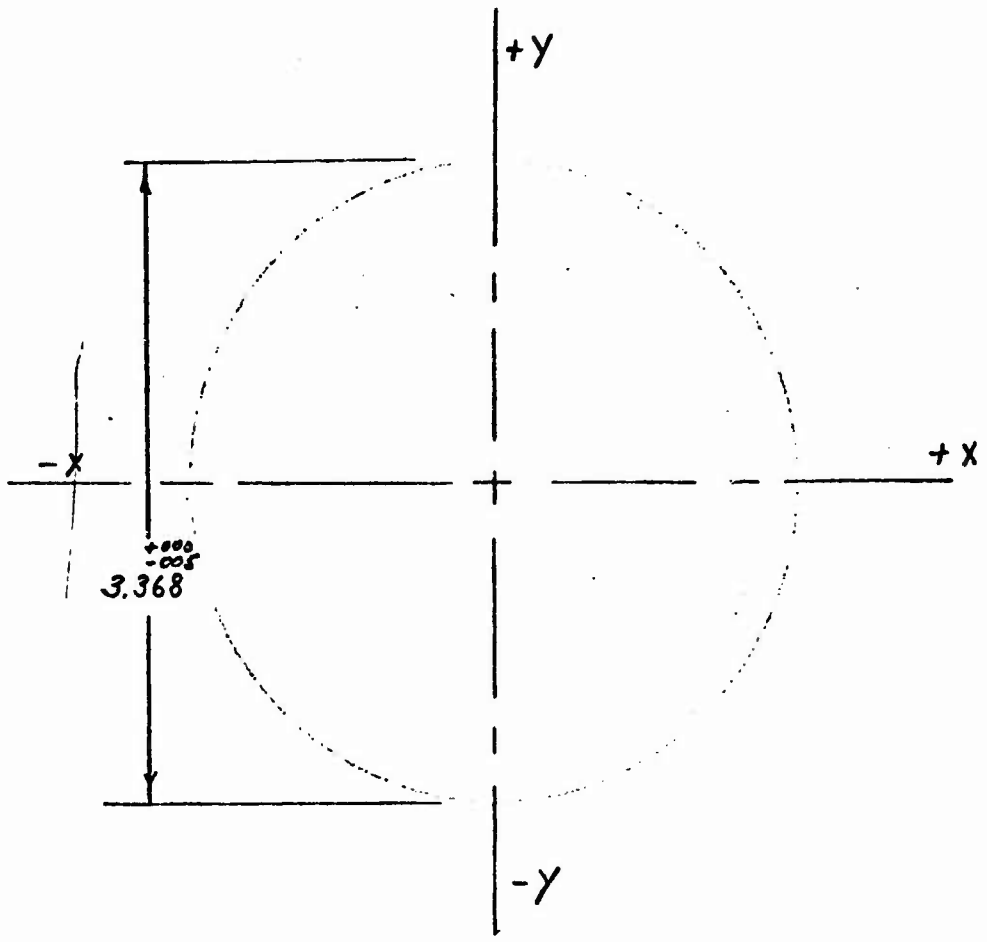

Item	
1	Top Disc, UPPER Deck
2	Bottom Disc, UPPER Deck
3	Top Disc, Lovier Deck
4	Bottom Disc, LOWER Deck

MATERIAL:- G7 Fiber Glass 1/32 THICK

TOLERANCES UNLESS OTHERWISE SPECIFIED	DIMENSION	UNDER 6	6 TO 24	OVER 24	FRACTIONS
	2 PLACE DEC.	± .02	± .03	± .06	
	3 PLACE DEC.	± .005	± .010	± .015	

Disc

ITT Federal LABORATORIES
A DIV. OF INT. TEL. & TEL. CORP.

USED ON

PREPARED BY [illegible] DATE 3-15-67

CHECKED BY DATE

CODE IDENT. NO. 90348

DWG. A SIZE

FM.032 3.37-01A

SHEET 1 OF 7

OGILVIE PRESS, INC., BROOKLYN 17, N. Y. REPROVEL NO. 440M

ITTFL DIS (R) REV. 6/64

DRAWING NUMBER

EXCEPT AS MAY BE OTHERWISE PROVIDED BY CONTRACT, THESE DRAWINGS AND SPECIFICATIONS ARE THE PROPERTY OF ITT FEDERAL LABORATORIES AND ARE ISSUED IN STRICT CONFIDENCE, AND SHALL NOT BE REPRODUCED, OR COPIED, OR USED AS THE BASIS FOR THE MANUFACTURE OR SALE OF APPARATUS WITHOUT PERMISSION.

ITT Federal LABORATORIES
A DIV. OF INT. TEL. & TEL. CORP.

SCHEDULE OF HOLES

ALL HOLE #56 DRILL (DIA.) UNLESS OTHERWISE SPECIFIED.

LOCATION X	LOCATION Y	ITEM 1	ITEM 2	ITEM 3	ITEM 4
+ 3/8	+1 3/16		X		
+ 13/32	"				X
+ 9/32	"				X
- 1/16	+1 1/4			X	X
+ 1/4	"			X	X
+ 13/32	"			X	X
+ 19/32	"			X	X
- 13/16	+1 3/16	3/16	3/16	3/16	3/16
- 5/8	"	X	X	X	
+ 13/16	"	3/16	3/16	3/16	3/16
- 1/16	+1 1/16			X	X
+ 3/32	"			X	X
+ 13/32	"			X	X
+ 19/32	"			X	X
+ 7/8	+1			X	X
+ 1	"	X	X	X	X
+ 1/16	+15/16			X	X
- 5/8	+7/8	X	X		
+ 19/32	"			X	X
+ 7/8	"	X	X		
+ 1	"	X	X		
+ 11/16	+13/16				X

TOLERANCES UNLESS OTHERWISE SPECIFIED	DIMENSION	UNDER 6	6 TO 24	OVER 24	FRACTIONS
	2 PLACE DEC.	± .02	± .03	± .06	
	3 PLACE DEC.	± .005	± .010	± .015	

Disc

USED ON

PREPARED BY — DATE 3-15-67

CHECKED BY — DATE

CODE IDENT. NO. 90348

DWG. A SIZE

FM.0323.37-01A

SHEET 2 OF 7

OGILVIE PRESS, INC., BROOKLYN 17, N. Y. REPROVEL NO. 440M

ITTFL 015 (X) REV. 6/64

DRAWING NUMBER

EXCEPT AS MAY BE OTHERWISE PROVIDED BY CONTRACT, THESE DRAWINGS AND SPECIFICATIONS ARE THE PROPERTY OF ITT FEDERAL LABORATORIES, ARE ISSUED IN STRICT CONFIDENCE, AND SHALL NOT BE REPRODUCED, OR COPIED, OR USED AS THE BASIS FOR THE MANUFACTURE OR SALE OF APPARATUS WITHOUT PERMISSION.

ITT Federal LABORATORIES
A DIV OF INT TEL. & TEL. CORP.

SCHEDULE OF HOLES (CONT.)

LOCATION X	LOCATION Y	ITEM 1	ITEM 2	ITEM 3	ITEM 4
- 3/4	+ 3/4	X	X	X	
- 1/4	"				1/4
+ 3/4	"	X	X		
- 7/16	+ 5/8	X	X		
+ 11/16	"				X
+ 1	"		1/8		
+ 1 1/4	"	X	X		
+ 1/2	+ 9/16				X
+ 5/8	"			X	
- 1 1/8	+ 1/2		X		
- 1/4	"		X		
- 1/8	"		X		
+ 1/16	"	X			
+ 3/4	"	X	X		
- 1/16	+ 7/16				X
- 3/16	"	3/8			
+ 5/16	"			X	X
- 1	+ 3/8	X	X		
- 9/16	"	X	X		
- 1/4	"		X		
+ 1/8	"	X	X		
+ 1/2	"				X
+ 5/8	"			X	
+ 29/32	"		X		
+ 1 3/32	"		X		

TOLERANCES UNLESS OTHERWISE SPECIFIED	DIMENSION	UNDER 6	6 TO 24	OVER 24	FRACTIONS
	2 PLACE DEC.	± .02	± .03	± .06	
	3 PLACE DEC.	± .005	± .010	± .015	

DISC

USED ON

PREPARED BY [illegible] DATE 3-15-67

CHECKED BY DATE

CODE IDENT. NO. 90348

DWG. A SIZE

FM.032 3.37-01A

SHEET 3 OF 7

OGILVIE PRESS, INC., BROOKLYN 17, N. Y. REPROVEL NO. 440M

SCHEDULE OF HOLES (CONT.)

LOCATION X	LOCATION Y	ITEM 1	ITEM 2	ITEM 3	ITEM 4
- 3/8	+ 1/4	X	X		
- 11/16	"	X	X		
- 7/16	"	X	X		
+ 1/2	"		X	X	X
+ 5/8	"	X	X		
+ 29/32	"		X		
+1 3/32	"		X		
+ 3/8	+ 1/8				X
+ 1/2	"			X	X
-1 1/8	+ 3/32		X		
- 3/4	"	X	X		
- 7/16	"		X		
- 1/4	"		X		
+ 5/8	"	X	X		
+ 1	"		X		
-1 1/2	0		X	X	
-1 3/32	0		X		
-1 1/8	0	3/8			
0	0	.358	1/4	3/8	.578
+ 1/4	0	X	X		
+1	0	3/8			
+1 3/32	0		X		
+1 1/2	0		X	X	

TOLERANCES UNLESS OTHERWISE SPECIFIED	DIMENSION	UNDER 6	6 TO 24	OVER 24	FRACTIONS
	2 PLACE DEC.	± .02	± .03	± .06	
	3 PLACE DEC.	± .005	± .010	± .015	

DISC

USED ON

PREPARED BY — DATE 3-15-67

CHECKED BY — DATE

CODE IDENT. NO. 90348

DWG. SIZE A

FM.022337-011

SHEET 4 OF 7

ITT Federal LABORATORIES
A DIV. OF INT. TEL & TEL. CORP.

DRAWING NUMBER

ITTFL DIS (X) REV. 6/64

EXCEPT AS MAY BE OTHERWISE PROVIDED BY CONTRACT, THESE DRAWINGS AND SPECIFICATIONS ARE THE PROPERTY OF ITT FEDERAL LABORATORIES, ARE ISSUED IN STRICT CONFIDENCE, AND SHALL NOT BE REPRODUCED, OR COPIED, OR USED AS THE BASIS FOR THE MANUFACTURE OR SALE OF APPARATUS WITHOUT PERMISSION.

OGILVIE PRESS, INC., BROOKLYN 17, N. Y. REPROVEL NO. 440M

ITTFL DIS (X) REV. 6/64

DRAWING NUMBER

EXCEPT AS MAY BE OTHERWISE PROVIDED BY CONTRACT. THESE DRAWINGS AND SPECIFICATIONS ARE THE PROPERTY OF ITT FEDERAL LABORATORIES, ARE ISSUED IN STRICT CONFIDENCE, AND SHALL NOT BE REPRODUCED, OR COPIED, OR USED AS THE BASIS FOR THE MANUFACTURE OR SALE OF APPARATUS WITHOUT PERMISSION.

ITT Federal LABORATORIES
A DIV. OF INT. TEL. & TEL. CORP.

SCHEDULE OF HOLES (CONT.)

LOCATION X	LOCATION Y	ITEM 1	ITEM 2	ITEM 3	ITEM 4
-1 1/8	- 3/32		X		
- 3/4	"	X	X		
- 7/16	"		X		
- 1/4	"		X		
+ 5/8	"	X	X		
+ 1	"		X		
-1 1/2	- 1/4	X	X		
- 1 1/4	"	X	X		
- 1 1/8	"	X	X		
- 7/8	"	X	X		
- 11/16	"	X	X		
- 7/16	"	X	X		
+ 1/2	"		X		
+ 5/8	"	X	X		
+ 3/4	"	X	X		
+ 15/16	"	X	X		
+ 1 1/8	"		X		
- 9/16	- 3/8	X	X		
- 1/4	"		X		X
- 1/8	"		X		
+ 1/8	"	X	X		
+ 1/4	"			X	X
+ 1/2	"				X
+ 1 1/8	"	X	X		

TOLERANCES UNLESS OTHERWISE SPECIFIED	DIMENSION	UNDER 6	6 TO 24	OVER 24	FRACTIONS
	2 PLACE DEC.	± .02	± .03	± .06	
	3 PLACE DEC.	± .005	± .010	± .015	

Disc

USED ON

PREPARED BY [illegible] DATE 3-15-67

CHECKED BY DATE

CODE IDENT. NO. 90348

DWG. SIZE A

FM.0323.37-01A

SHEET 5 OF 7

OGILVIE PRESS, INC., BROOKLYN 17, N. Y. REPROVEL NO. 440H

SCHEDULE OF HOLES (CONT.)

LOCATION X	LOCATION Y	ITEM 1	ITEM 2	ITEM 3	ITEM 4
-1 1/4	- 7/16	X	X		
-1	"	X	X		
- 3/16	"	3/8			
+ 3/32	"			3/8	
- 1/8	- 1/2		X		
0	"			X	X
+ 1/16	"	X			
+ 1/8	"				X
+ 13/32	"				X
+ 19/32	"				X
0	- 5/8			X	X
+ 1	"				1/8
+ 1 1/4	"			X	X
- 3/8	- 3/4	X	X		
- 1/4	"	X	X		
+ 3/4	"	X	X		
+ 1/4	- 7/8			X	X
+ 1/2	"				X
+ 3/4	"	X	X		
+ 1/2	- 15/16			3/8	
0	- 1			X	X
+ 13/32	"				X
+ 19/32	"				X

TOLERANCES UNLESS OTHERWISE SPECIFIED	DIMENSION	UNDER 6	6 TO 24	OVER 24	FRACTIONS
	2 PLACE DEC.	± .02	± .03	± .06	
	3 PLACE DEC.	± .005	± .010	± .015	

Disc

USED ON

PREPARED BY [illegible] DATE 3-15-67

CHECKED BY DATE

CODE IDENT. NO. 90348

DWG. A SIZE

FM.03233.37-01A

SHEET 5 OF 7

ITT Federal LABORATORIES A DIV. OF INT. TEL. & TEL. CORP.

EXCEPT AS MAY BE OTHERWISE PROVIDED BY CONTRACT, THESE DRAWINGS AND SPECIFICATIONS ARE THE PROPERTY OF ITT FEDERAL LABORATORIES, ARE ISSUED IN STRICT CONFIDENCE, AND SHALL NOT BE REPRODUCED, OR COPIED, OR USED AS THE BASIS FOR THE MANUFACTURE OR SALE OF APPARATUS WITHOUT PERMISSION.

DRAWING NUMBER

ITTFL DIS (IX) REV. 8-64

OGILVIE PRESS, INC., BROOKLYN 17, N. Y. REPROVEL NO. 440M

SCHEDULE OF HOLES (CONT.)

LOCATION X	LOCATION Y	ITEM 1	ITEM 2	ITEM 3	ITEM 4
−1/4	−1 1/8				X
0	"			X	X
+1/8	"				X
+1/4	"			X	X
−13/16	−1 3/16	3/16	3/16	3/16	3/16
+13/16	"	3/16	3/16	3/16	3/16
+3/8	−1 7/16		X		

TOLERANCES UNLESS OTHERWISE SPECIFIED	DIMENSION	UNDER 6	6 TO 24	OVER 24	FRACTIONS
	2 PLACE DEC.	± .02	± .03	± .05	
	3 PLACE DEC.	± .005	± .010	± .015	

DISC

USED ON

PREPARED BY [signature] DATE 3-15-67

CHECKED BY DATE

CODE IDENT. NO. 90348

DWG. SIZE A

FM.032337-01A

SHEET 7 OF 7

DRAWING NUMBER

ITTFL DIS (X) REV. 6/64

EXCEPT AS MAY BE OTHERWISE PROVIDED BY CONTRACT, THESE DRAWINGS AND SPECIFICATIONS ARE THE PROPERTY OF ITT FEDERAL LABORATORIES, ARE ISSUED IN STRICT CONFIDENCE, AND SHALL NOT BE REPRODUCED, OR COPIED, OR USED AS THE BASIS FOR THE MANUFACTURE OR SALE OF APPARATUS WITHOUT PERMISSION.

ITT Federal LABORATORIES
A DIV. OF INT. TEL. & TEL. CORP.

OGILVIE PRESS, INC., BROOKLYN 17, N. Y. REPROVEL NO. 440M

(ITTFL DIS (2) REV. 6/64

DRAWING NUMBER

EXCEPT AS MAY BE OTHERWISE PROVIDED BY CONTRACT. THESE DRAWINGS AND SPECIFICATIONS ARE THE PROPERTY OF ITT FEDERAL LABORATORIES, ARE ISSUED IN STRICT CONFIDENCE, AND SHALL NOT BE REPRODUCED, OR COPIED, OR USED AS THE BASIS FOR THE MANUFACTURE OR SALE OF APPARATUS WITHOUT PERMISSION.

ITT Federal LABORATORIES
A DIV. OF INT. TEL. & TEL. CORP.

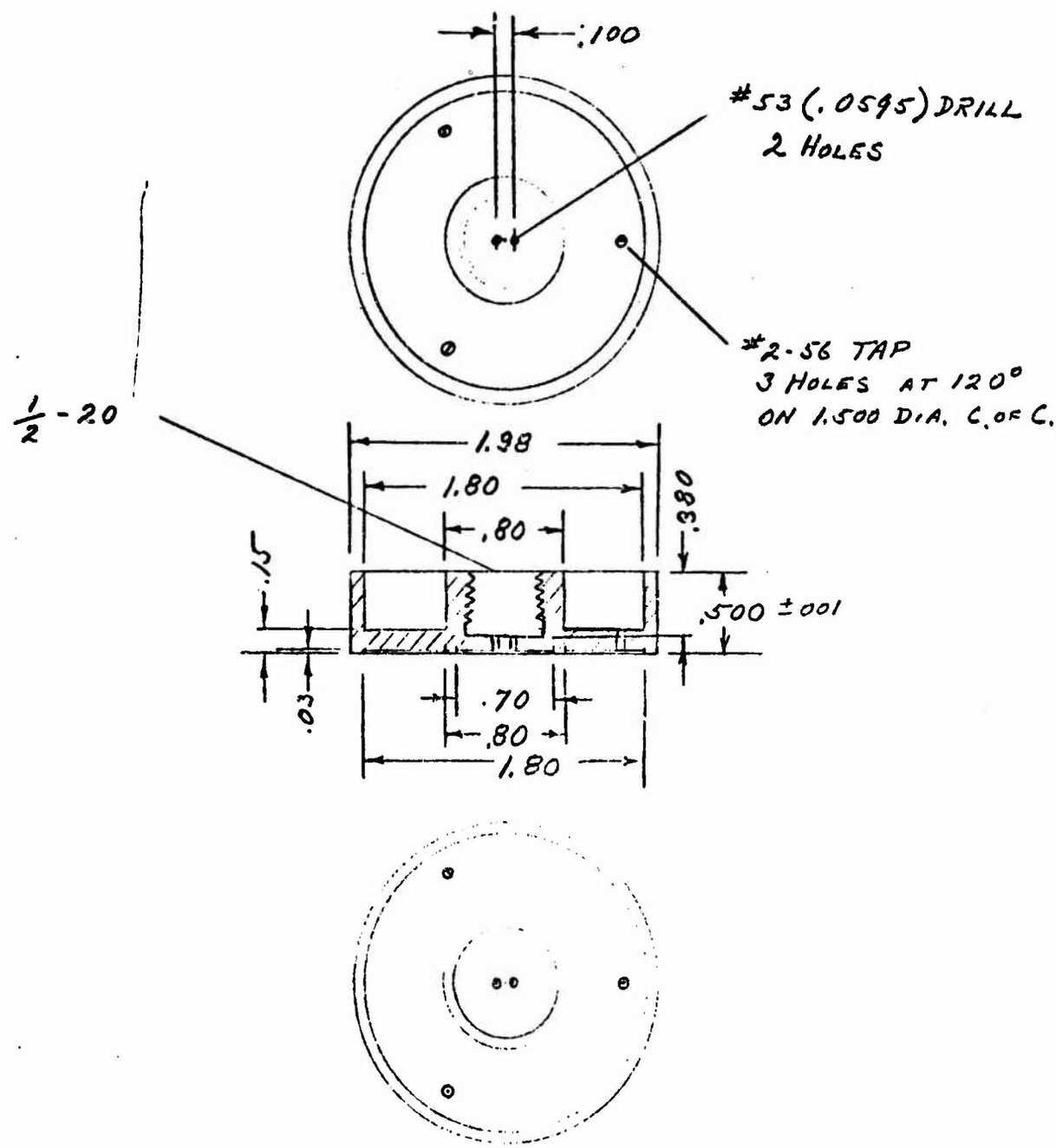

MATERIAL: BRASS

TOLERANCES UNLESS OTHERWISE SPECIFIED	DIMENSION	UNDER 6	6 TO 24	OVER 24	FRACTIONS
	2 PLACE DEC.	± .02	± .03	± .06	
	3 PLACE DEC.	± .005	± .010	± .015	

HEAD, COOLING

USED ON

PREPARED BY [signature] DATE 3-6-67

CHECKED BY DATE

CODE IDENT. NO. 90348

DWG. SIZE A

RM1.98.50-08A

SHEET

OGILVIE PRESS, INC., BROOKLYN 17, N. Y. REPROVEL NO. 440M

ITTFL D15 (X) REV. 6/64

DRAWING NUMBER

EXCEPT AS MAY BE OTHERWISE PROVIDED BY CONTRACT, THESE DRAWINGS AND SPECIFICATIONS ARE THE PROPERTY OF ITT FEDERAL LABORATORIES, ARE ISSUED IN STRICT CONFIDENCE, AND SHALL NOT BE REPRODUCED, OR COPIED, OR USED AS THE BASIS FOR THE MANUFACTURE OR SALE OF APPARATUS WITHOUT PERMISSION.

ITT Federal LABORATORIES
A DIV. OF INT. TEL. & TEL. CORP.

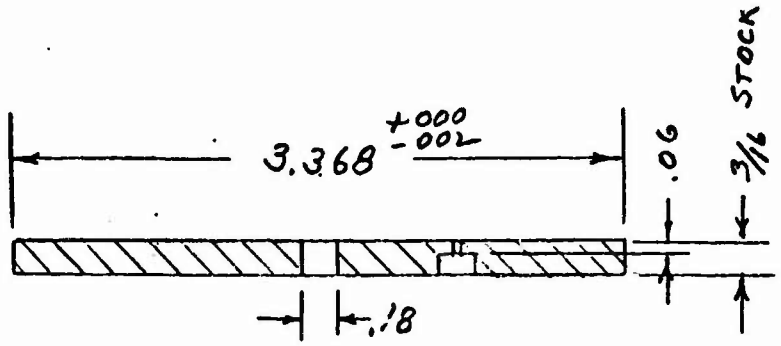

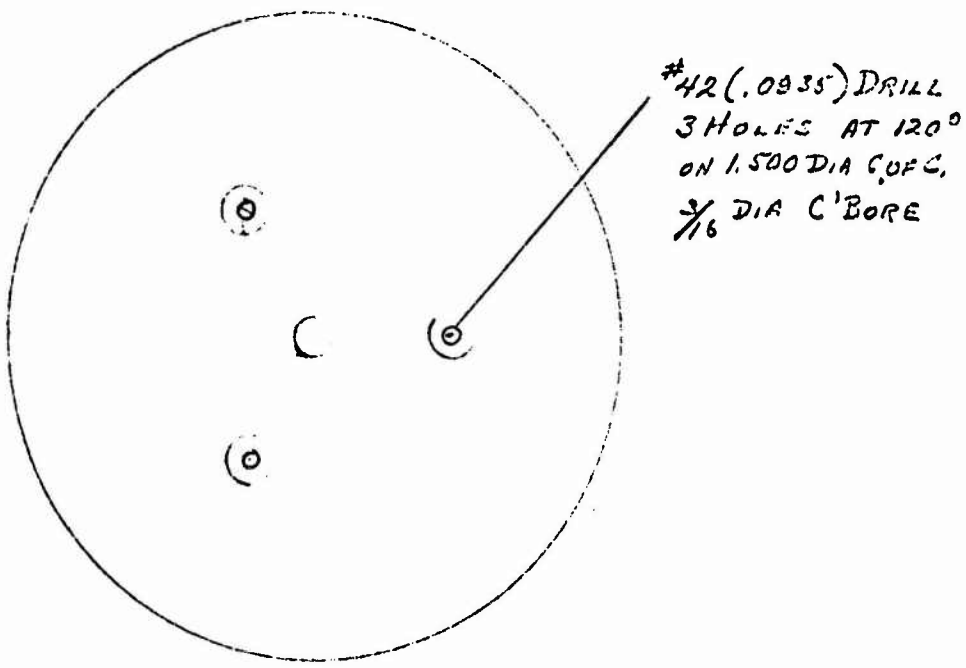

MATERIAL:- G 7 (GLASS CLOTH REINFORCED SILICON) FIBER GLASS

TOLERANCES UNLESS OTHERWISE SPECIFIED	DIMENSION	UNDER 6	6 TO 24	OVER 24	FRACTIONS
	2 PLACE DEC.	± .02	± .03	± .06	
	3 PLACE DEC.	± .005	± .010	± .015	

HEAD FLANGE

USED ON

PREPARED BY, DATE
[illegible] 3-6-67

CHECKED BY DATE

CODE IDENT. NO. 90348

DWG SIZE A

FM.183 3.4 - 08A

SHEET

DOLVIG PRESS, INC. BROOKLYN 17, N. Y. REPRODUCED NO. 440M

ITTFL D1B (X) REV. 6/64

DRAWING NUMBER

EXCEPT AS MAY BE OTHERWISE PROVIDED BY CONTRACT, THESE DRAWINGS AND SPECIFICATIONS ARE THE PROPERTY OF ITT FEDERAL LABORATORIES, ARE ISSUED IN STRICT CONFIDENCE, AND SHALL NOT BE REPRODUCED, OR COPIED, OR USED AS THE BASIS FOR THE MANUFACTURE OR SALE OF APPARATUS WITHOUT PERMISSION.

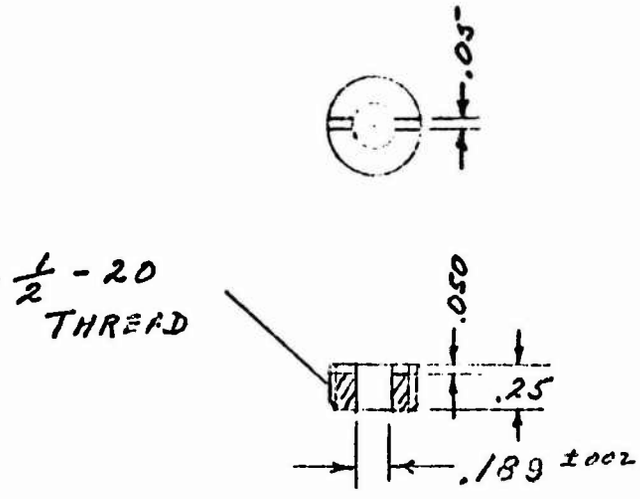

MATERIAL :- BRASS

ITT Federal LABORATORIES
A DIV. OF INT. TEL. & TEL. CORP.

TOLERANCES UNLESS OTHERWISE SPECIFIED	DIMENSION	UNDER 6	6 TO 24	OVER 24	FRACTIONS
	2 PLACE DEC.	± .02	± .03	± .06	
	3 PLACE DEC.	± .005	± .010	± .015	

JAM NUT, LASER

USED ON

PREPARED BY DATE

CHECKED BY DATE

CODE IDENT. NO. 90348

DWG. SIZE A

RM.500.25-01A

SHEET

OGILVIE PRESS, INC., BROOKLYN 17, N. Y. REPROVEL NO. 440M

ITTFL DIS (X) REV. 6/64

DRAWING NUMBER

EXCEPT AS MAY BE OTHERWISE PROVIDED BY CONTRACT, THESE DRAWINGS AND SPECIFICATIONS ARE THE PROPERTY OF ITT FEDERAL LABORATORIES, ARE ISSUED IN STRICT CONFIDENCE, AND SHALL NOT BE REPRODUCED, OR COPIED, OR USED AS THE BASIS FOR THE MANUFACTURE OR SALE OF APPARATUS WITHOUT PERMISSION.

ITT Federal LABORATORIES
A DIV. OF INT. TEL. & TEL. CORP.

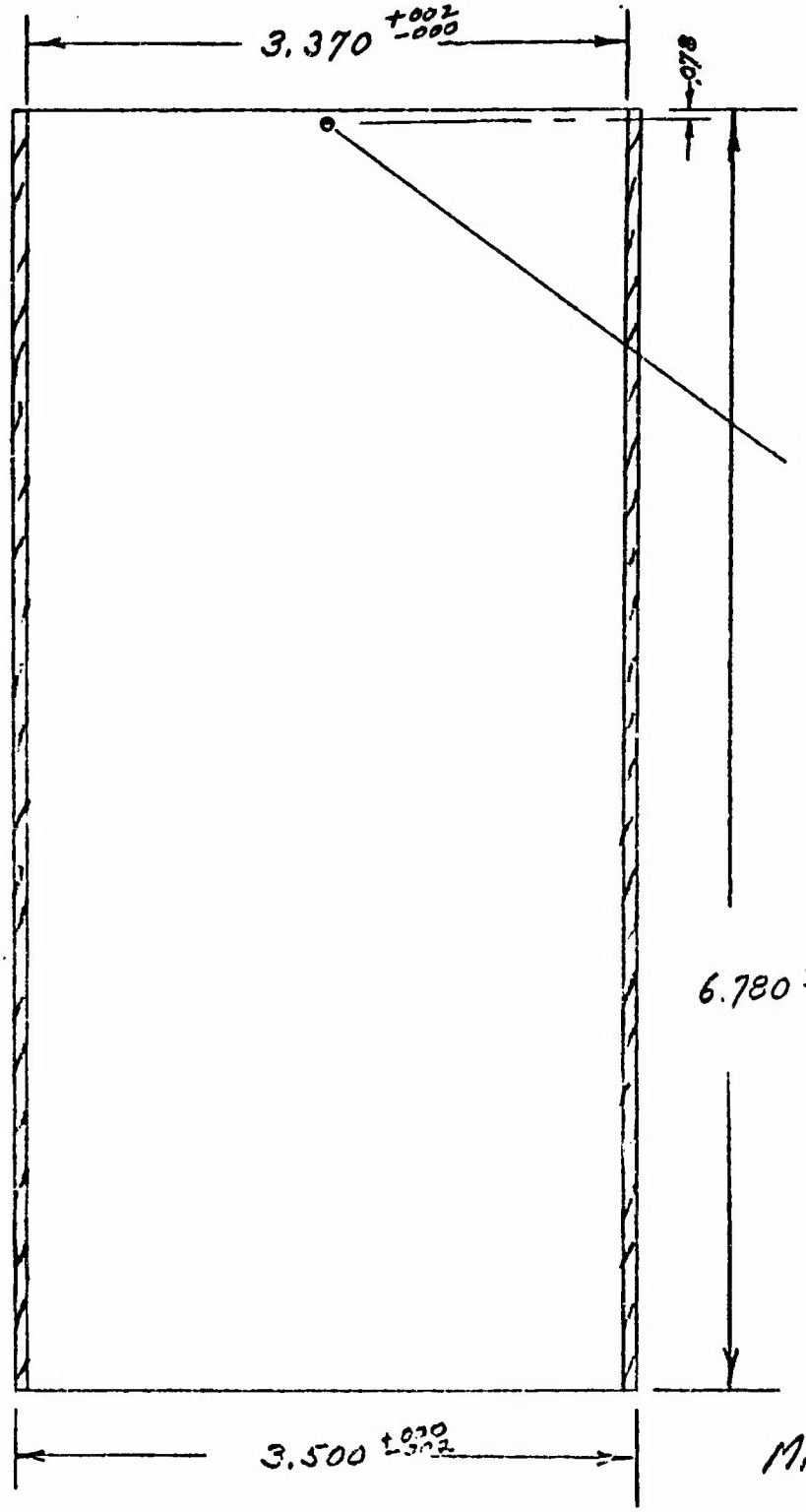

MATERIAL:-
STAINLESS
STEEL

TOLERANCES UNLESS OTHERWISE SPECIFIED	DIMENSION	UNDER 6	6 TO 24	OVER 24	FRACTIONS
	2 PLACE DEC.	± .02	± .03	± .06	
	3 PLACE DEC.	± .005	± .010	± .015	

CASE

USED ON

PREPARED BY [illegible] DATE 3-3-67

CHECKED BY DATE

CODE IDENT. NO. 90348

DWG. SIZE A

T 3.50.065A-6.78

SHEET

OGILVIE PRESS, INC., BROOKLYN 17, N. Y. REPROVEL NO. 440M

(ITTFL DIS (X) REV. 6/64

DRAWING NUMBER

EXCEPT AS MAY BE OTHERWISE PROVIDED BY CONTRACT, THESE DRAWINGS AND SPECIFICATIONS ARE THE PROPERTY OF ITT FEDERAL LABORATORIES, ARE ISSUED IN STRICT CONFIDENCE, AND SHALL NOT BE REPRODUCED, OR COPIED, OR USED AS THE BASIS FOR THE MANUFACTURE OR SALE OF APPARATUS WITHOUT PERMISSION.

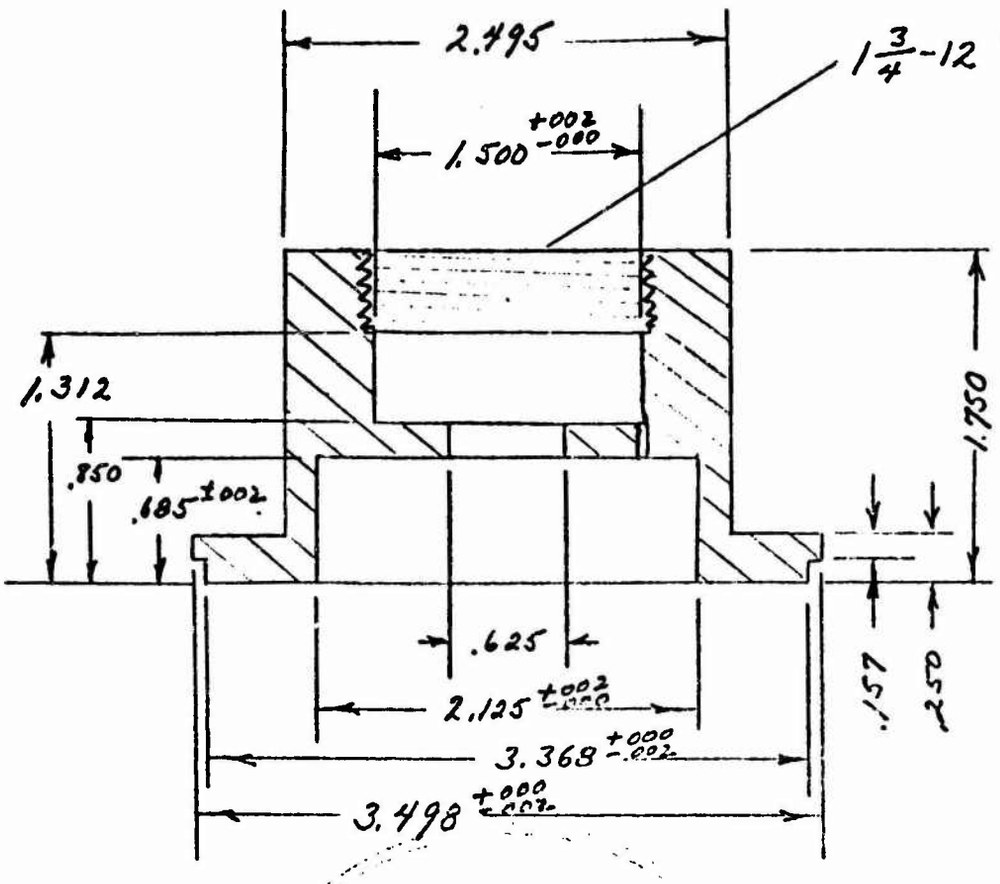

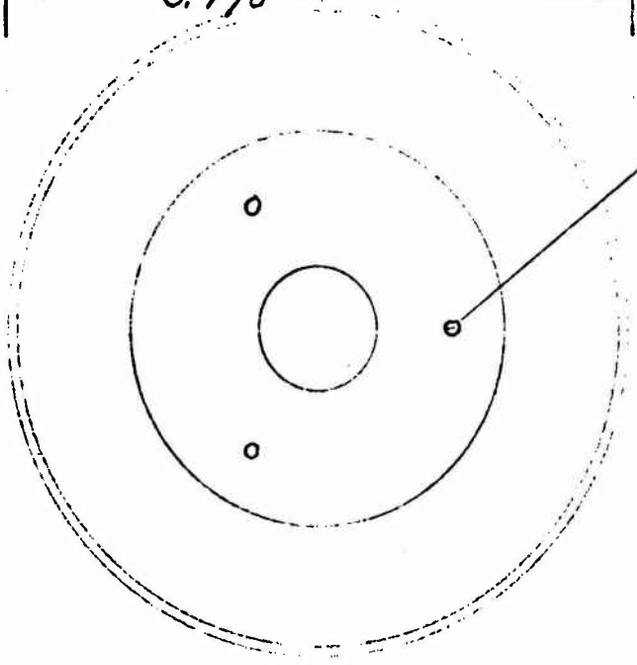

MATERIAL:
ALUMINUM

TOLERANCES UNLESS OTHERWISE SPECIFIED	DIMENSION	UNDER 6	6 TO 24	OVER 24	FRACTIONS
	2 PLACE DEC.	± .02	± .03	± .06	
	3 PLACE DEC.	± .005	± .010	± .015	

NOSE

ITT Federal LABORATORIES
A DIV. OF INT. TEL. & TEL. CORP.

USED ON

PREPARED BY: [illegible] DATE 3-6-67

CHECKED BY DATE

CODE IDENT. NO. 90348

DWG. A SIZE

RM 3.501.1-01A

SHEET

OGILVIE PRESS, INC., BROOKLYN 17, N. Y. REPROVEL NO. 440M

ITTFL D15 (X), REV. 6/64

DRAWING NUMBER

EXCEPT AS MAY BE OTHERWISE PROVIDED BY CONTRACT, THESE DRAWINGS AND SPECIFICATIONS ARE THE PROPERTY OF ITT FEDERAL LABORATORIES, ARE ISSUED IN STRICT CONFIDENCE, AND SHALL NOT BE REPRODUCED, OR COPIED, OR USED AS THE BASIS FOR THE MANUFACTURE OR SALE OF APPARATUS WITHOUT PERMISSION.

ITT Federal LABORATORIES
A DIV. OF INT TEL. & TEL. CORP.

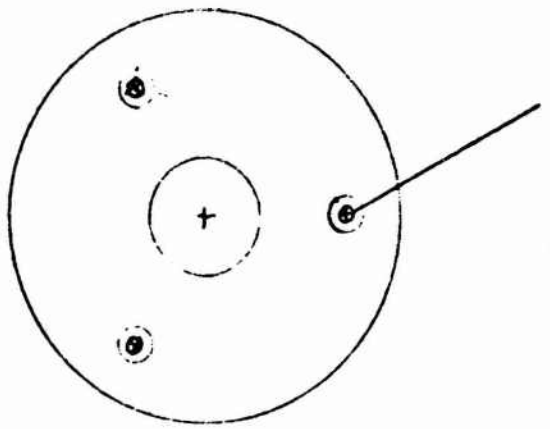

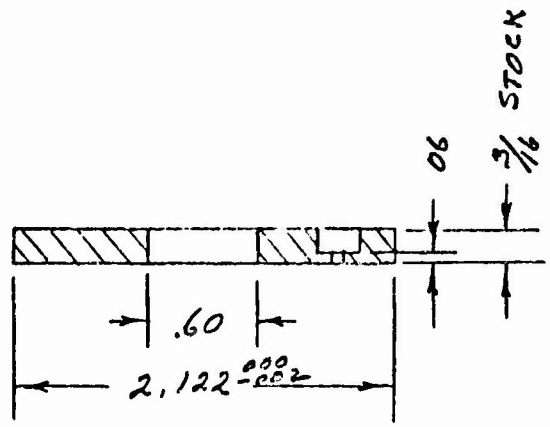

MATERIAL:- G7 FIBER GLASS (SILICON REINFORCED)

TOLERANCES UNLESS OTHERWISE SPECIFIED	DIMENSION	UNDER 6	6 TO 24	OVER 24	FRACTIONS
	2 PLACE DEC.	± .02	± .03	± .06	
	3 PLACE DEC.	± .005	± .010	± .015	

PAD, NOSE

USED ON

PREPARED BY: [illegible] DATE: 3-6-67

CHECKED BY DATE

CODE IDENT. NO. 90348

DWG. SIZE A

FM.1332.1-06A

SHEET

OGILVIE PRESS, INC., BROOKLYN 17, N. Y. REPROVEL NO. 440M

ITTFL 015 (X) REV. 6/64

DRAWING NUMBER

EXCEPT AS MAY BE OTHERWISE PROVIDED BY CONTRACT, THESE DRAWINGS AND SPECIFICATIONS ARE THE PROPERTY OF ITT FEDERAL LABORATORIES, ARE ISSUED IN STRICT CONFIDENCE, AND SHALL NOT BE REPRODUCED, OR COPIED, OR USED AS THE BASIS FOR THE MANUFACTURE OR SALE OF APPARATUS WITHOUT PERMISSION.

ITT Federal LABORATORIES
A DIV. OF INT. TEL. & TEL. CORP.

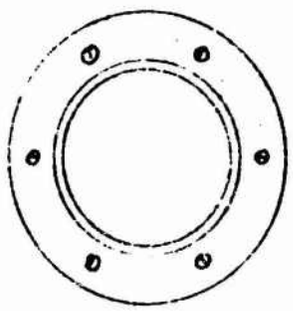

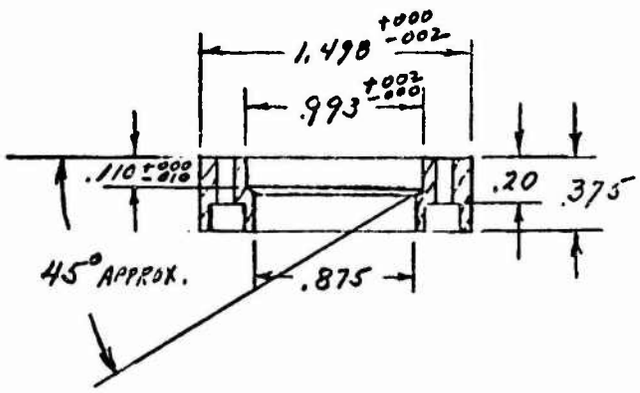

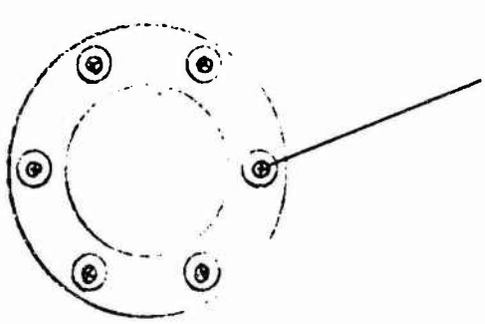

#42 (.094) DRILL
AND 3/16 DIA C'BORE
6 HOLES EQU. SPACED
ON 1.250 DIA C. OF C.

MATERIAL: BRASS

TOLERANCES UNLESS OTHERWISE SPECIFIED	DIMENSION	UNDER 6	6 TO 24	OVER 24	FRACTIONS
	2 PLACE DEC.	± .02	± .03	± .06	
	3 PLACE DEC.	± .005	± .010	± .015	

COLLAR

USED ON

PREPARED BY [illegible] DATE 2-8-67

CHECKED BY DATE

CODE IDENT. NO. 90348

DWG. SIZE A

RM 1.50.38-01A

SHEET

QUALITY PRESS, INC. BROOKLYN 17, N. Y. REPROVEL NO. 440M

ITTFL D15 (R) REV. 6/64

DRAWING NUMBER

EXCEPT AS MAY BE OTHERWISE PROVIDED BY CONTRACT, THESE DRAWINGS AND SPECIFICATIONS ARE THE PROPERTY OF ITT FEDERAL LABORATORIES, ARE ISSUED IN STRICT CONFIDENCE, AND SHALL NOT BE REPRODUCED, OR COPIED, OR USED AS THE BASIS FOR THE MANUFACTURE OR SALE OF APPARATUS WITHOUT PERMISSION.

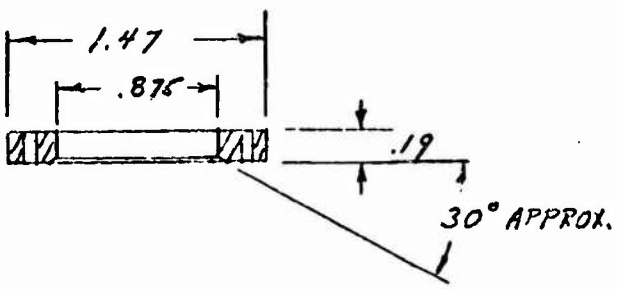

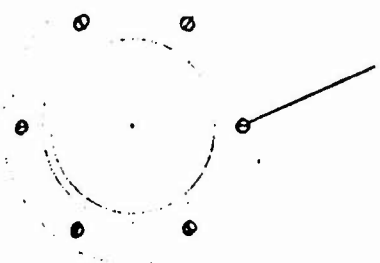

MATERIAL:- BRASS

TOLERANCES UNLESS OTHERWISE SPECIFIED	DIMENSION	UNDER 6	6 TO 24	OVER 24	FRACTIONS
	2 PLACE DEC.	± .02	± .03	± .06	
	3 PLACE DEC.	± .005	± .010	± .015	

CLAMP RING

USED ON

PREPARED BY [illegible] DATE 3-8-67

CHECKED BY DATE

CODE IDENT. NO. 90348

DWG. A SIZE

RM 1.50.19-DIA

SHEET

ITT Federal LABORATORIES
A DIV. OF INT. TEL. & TEL. CORP.

OGILVIE PRESS, INC., BROOKLYN 17, N. Y. REPROVEL NO. 440M

ITTFL 015 (X) REV. 6/64

DRAWING NUMBER

EXCEPT AS MAY BE OTHERWISE PROVIDED BY CONTRACT. THESE DRAWINGS AND SPECIFICATIONS ARE THE PROPERTY OF ITT FEDERAL LABORATORIES, ARE ISSUED IN STRICT CONFIDENCE, AND SHALL NOT BE REPRODUCED, OR COPIED, OR USED AS THE BASIS FOR THE MANUFACTURE OR SALE OF APPARATUS WITHOUT PERMISSION.

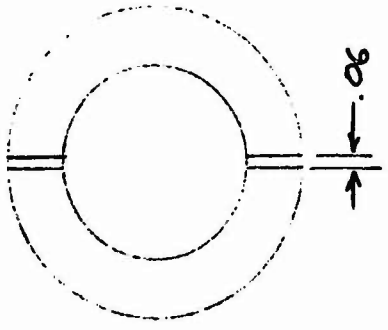

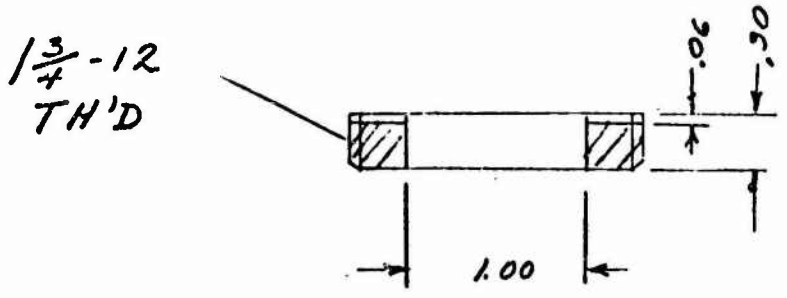

MATERIAL:- #303 STAINLESS STEEL.

ITT Federal LABORATORIES
A DIV. OF INT. TEL. & TEL. CORP.

TOLERANCES UNLESS OTHERWISE SPECIFIED	DIMENSION	UNDER 6	6 TO 24	OVER 24	FRACTIONS
	2 PLACE DEC.	± .02	± .03	± .06	
	3 PLACE DEC.	± .005	± .010	± .015	

JAM NUT, LENS

USED ON

PREPARED BY: [illegible] DATE: 3-6-67

CHECKED BY DATE

CODE IDENT. NO. 90348

DWG. A SIZE

RM 1.75.30-01A

SHEET

OGILVIE PRESS, INC., BROOKLYN 17, N. Y. REPROVEL NO. 440M

Unclassified
Security Classification

3ND PPSO 13152

DOCUMENT CONTROL DATA - R&D

(Security classification of title, body of abstract and indexing annotation must be entered when the overall report is classified)

1. ORIGINATING ACTIVITY (Corporate author) ITT Federal Laboratories 500 Washington Ave., Nutley, N.J.	2a. REPORT SECURITY CLASSIFICATION Unclassified 2b. GROUP

3. REPORT TITLE

LASER TELEMETER FOR AIR GUN APPLICATION

4. DESCRIPTIVE NOTES (Type of report and inclusive dates)

Technical Task Final 29 Nov 1966 29 April 1967

5. AUTHOR(S) (Last name, first name, initial)

Vallese, Lucio M.
Wallace, Milner W.

6. REPORT DATE JUNE 1967	7a. TOTAL NO. OF PAGES 73	7b. NO. OF REFS
8a. CONTRACT OR GRANT NO. DA 28-017-AMC-3455(E) b. PROJECT NO. Task No. 1 c. AMCMS 5023.11.14200 d.	9a. ORIGINATOR'S REPORT NUMBER(S) 9b. OTHER REPORT NO(S) (Any other numbers that may be assigned this report)	

10. AVAILABILITY/LIMITATION NOTICES

Distribution of this document is unlimited.

11. SUPPLEMENTARY NOTES	12. SPONSORING MILITARY ACTIVITY United States Army Picatinny Arsenal Dover, New Jersey 07801

13. ABSTRACT

The work of design and fabrication of three Laser Telemeter Units having 18 channels of IRIG telemetry and using a PPM GaAs Laser is described. After a general discussion of the principles of telemetry and of the signal-to-noise enhancement properties of FM, PPM, and PCM systems, a detailed discussion of the electrical and of the mechanical design is presented. (U)

DD FORM 1 JAN 64 1473 IIA 0101 807 5800

Unclassified
Security Classification

Unclassified
Security Classification

14. KEY WORDS	LINK A		LINK B		LINK C	
	ROLE	WT	ROLE	WT	ROLE	WT
Laser **Telemeter** **GaAs Semiconductor Laser** **PPM-FM Telemetry** **Air-Gun Testing**						

INSTRUCTIONS

1. ORIGINATING ACTIVITY: Enter the name and address of the contractor, subcontractor, grantee, Department of Defense activity or other organization *(corporate author)* issuing the report.

2a. REPORT SECURITY CLASSIFICATION: Enter the overall security classification of the report. Indicate whether "Restricted Data" is included. Marking is to be in accordance with appropriate security regulations.

2b. GROUP: Automatic downgrading is specified in DoD Directive 5200.10 and Armed Forces Industrial Manual. Enter the group number. Also, when applicable, show that optional markings have been used for Group 3 and Group 4 as authorized.

3. REPORT TITLE: Enter the complete report title in all capital letters. Titles in all cases should be unclassified. If a meaningful title cannot be selected without classification, show title classification in all capitals in parenthesis immediately following the title.

4. DESCRIPTIVE NOTES: If appropriate, enter the type of report, e.g., interim, progress, summary, annual, or final. Give the inclusive dates when a specific reporting period is covered.

5. AUTHOR(S): Enter the name(s) of author(s) as shown on or in the report. Enter last name, first name, middle initial. If military, show rank and branch of service. The name of the principal author is an absolute minimum requirement.

6. REPORT DATE: Enter the date of the report as day, month, year, or month, year. If more than one date appears on the report, use date of publication.

7a. TOTAL NUMBER OF PAGES: The total page count should follow normal pagination procedures, i.e., enter the number of pages containing information.

7b. NUMBER OF REFERENCES: Enter the total number of references cited in the report.

8a. CONTRACT OR GRANT NUMBER: If appropriate, enter the applicable number of the contract or grant under which the report was written.

8b, 8c, & 8d. PROJECT NUMBER: Enter the appropriate military department identification, such as project number, subproject number, system numbers, task number, etc.

9a. ORIGINATOR'S REPORT NUMBER(S): Enter the official report number by which the document will be identified and controlled by the originating activity. This number must be unique to this report.

9b. OTHER REPORT NUMBER(S): If the report has been assigned any other report numbers *(either by the originator or by the sponsor)*, also enter this number(s).

10. AVAILABILITY/LIMITATION NOTICES: Enter any limitations on further dissemination of the report, other than those imposed by security classification, using standard statements such as:

(1) "Qualified requesters may obtain copies of this report from DDC."

(2) "Foreign announcement and dissemination of this report by DDC is not authorized."

(3) "U. S. Government agencies may obtain copies of this report directly from DDC. Other qualified DDC users shall request through _____."

(4) "U. S. military agencies may obtain copies of this report directly from DDC. Other qualified users shall request through _____."

(5) "All distribution of this report is controlled. Qualified DDC users shall request through _____."

If the report has been furnished to the Office of Technical Services, Department of Commerce, for sale to the public, indicate this fact and enter the price, if known.

11. SUPPLEMENTARY NOTES: Use for additional explanatory notes.

12. SPONSORING MILITARY ACTIVITY: Enter the name of the departmental project office or laboratory sponsoring *(paying for)* the research and development. Include address.

13. ABSTRACT: Enter an abstract giving a brief and factual summary of the document indicative of the report, even though it may also appear elsewhere in the body of the technical report. If additional space is required, a continuation sheet shall be attached.

It is highly desirable that the abstract of classified reports be unclassified. Each paragraph of the abstract shall end with an indication of the military security classification of the information in the paragraph, represented as *(TS)*, *(S)*, *(C)*, or *(U)*.

There is no limitation on the length of the abstract. However, the suggested length is from 150 to 225 words.

14. KEY WORDS: Key words are technically meaningful terms or short phrases that characterize a report and may be used as index entries for cataloging the report. Key words must be selected so that no security classification is required. Identifiers, such as equipment model designation, trade name, military project code name, geographic location, may be used as key words but will be followed by an indication of technical context. The assignment of links, roles, and weights is optional.

Unclassified
Security Classification